MusicParts.Com

Technical Document Distribution

Brand:	**Oberheim**
Model	**OB-1**
Product:	**Synthesizer**
Description:	**Schematic**

Musicparts Document Number: 45875 TechTips: No Pages: 20 Dated: 1977-78

Hello,
Welcome to MusicParts.Com, Inc. your online resource for technical documents and service information. This PDF package may contain information, schematics, parts lists, images, engineering changes, previous versions, circuit descriptions, and many other unique features about the product you have chosen. This document was assembled from a variety of sources and is the result of our many years in the music repair business.

TECHTIPS: Unique to Musicparts documents are **TECHTIPS** located in critical areas on the schematics. They contain useful information about that area of the schematic such as common problems that we have found and recommended changes. Not all documents will have TechTips.

NOTE: Large original over-sized drawings will need to be taped together. We feel this is better than reducing them and losing fine details.

VIEWING: This document is utilizing PAGE-ON-DEMAND downloading. This will let you navigate to any page without waiting for the entire file to download.

PRINTING: For the best quality, we highly recommend that when the print dialog appears, please **make sure "SHRINK OVERSIZED PAGES " is checked**., otherwise you may cut off the edge of the page. Also please stay online while printing this document to make sure you get all the pages.

Visit us on the web at: http://www.musicparts.com/
Email us at: customerservice@musicparts.com

© 2005 MusicParts.Com, Inc.

MusicParts.Com Special Notes

Copy Quality Concerns

PLEASE NOTE: This Package Contains Blueprints

The following documents were taken from rare original factory blueprints which are quite old and faded but are still quite readable. As you know, blueprints are not very sharp but it was the best technology of it's day.

For best results, print them using a laser printer. We use high quality scanning techniques and copy quality will be identical to the originals.

Thank You,
Musicparts.com

Oberheim

OB-1

Schematics

MusicParts.Com

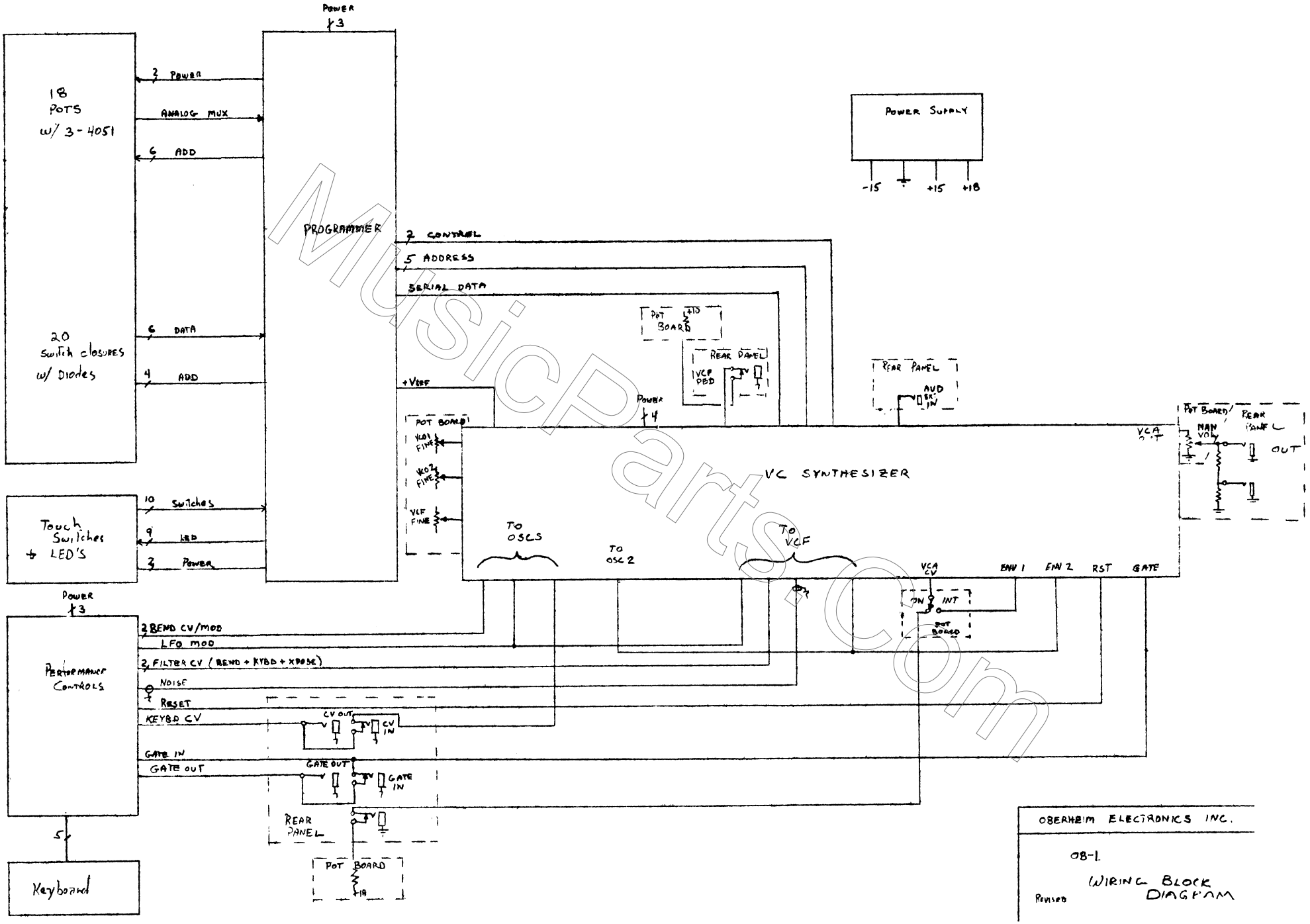

MusicParts.com

OBERHEIM ELECTRONICS INC.

OB-1

WIRING BLOCK DIAGRAM

Revised

OB-1 SYNTH BD

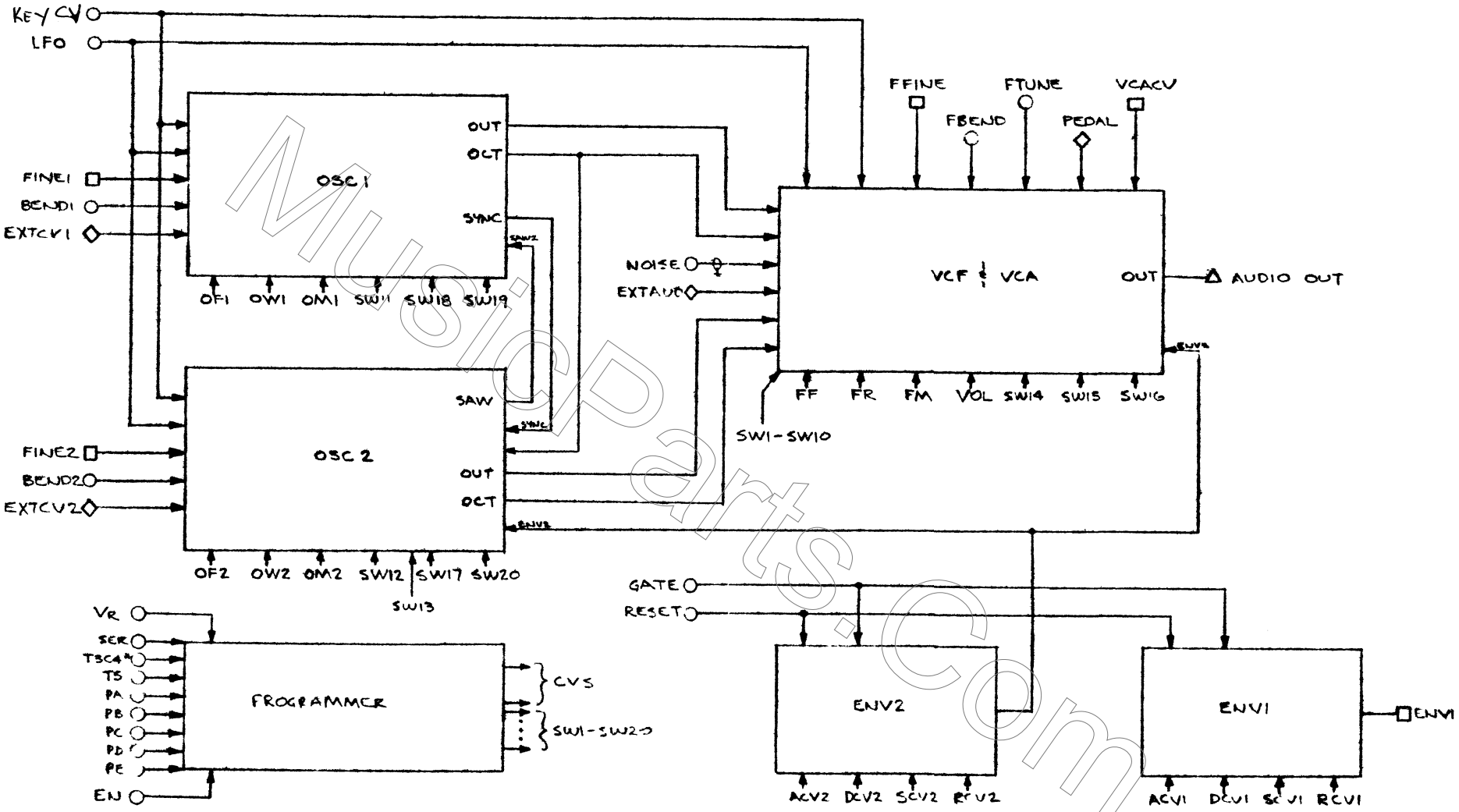

○ = TO/FROM PERFORMANCE BD
□ = TO/FROM POT BD
◇ = TO/FROM REAR PANEL

MusicParts.com

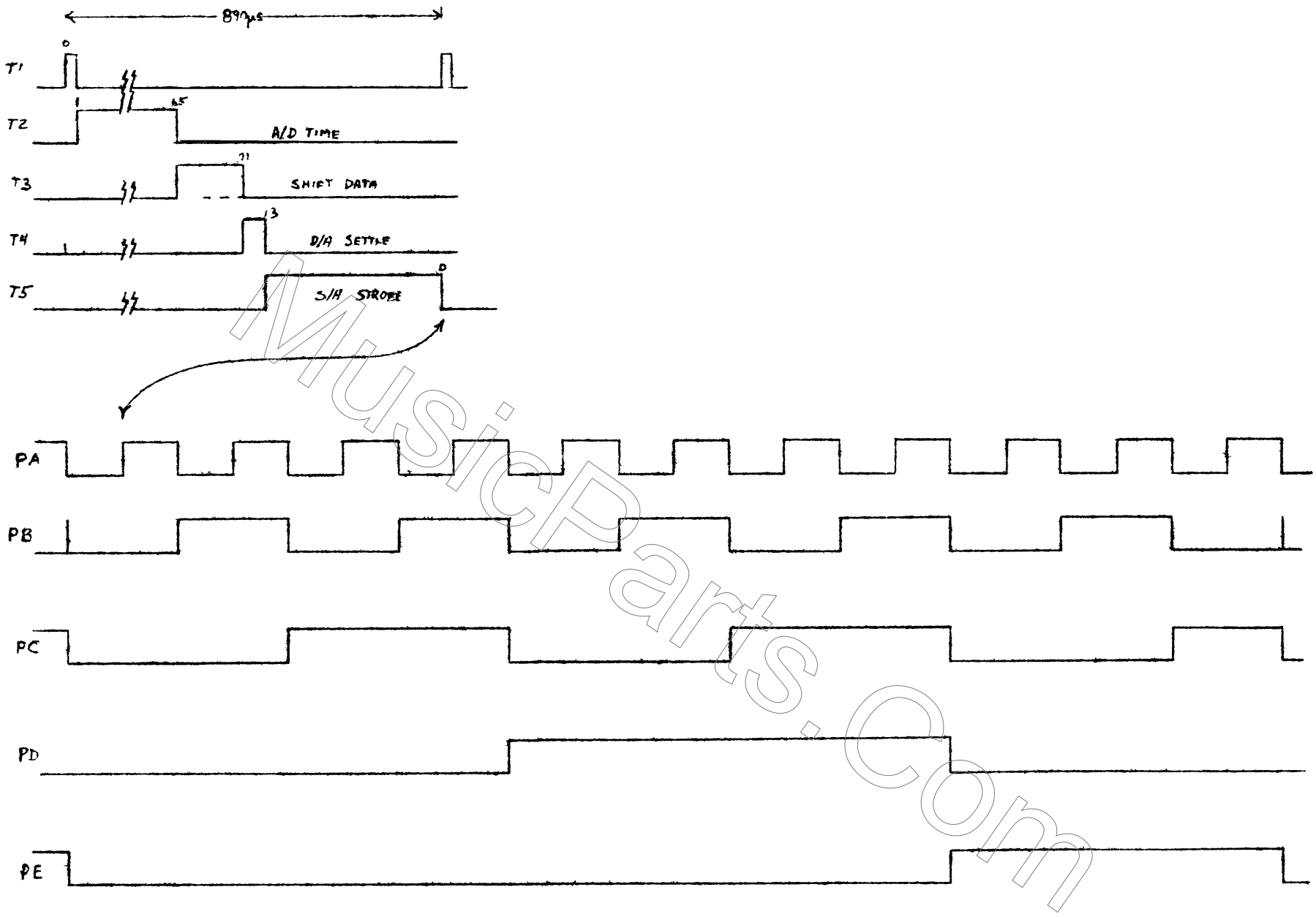

MusicParts.com

OB-1
TIMING

ATT1	DCY1	SUS1	RLS1	ATT2	DCY2	SUS2	RLS2	VCO1 FREQ	VCO2 FREQ	VCF FREQ	VCF RES	VCO1 WAVE	VCO2 WAVE	VCO1 MOD	VCO2 MOD	SW1	SW2	SW3	SW4	VCF MOD	VOL

196 ms

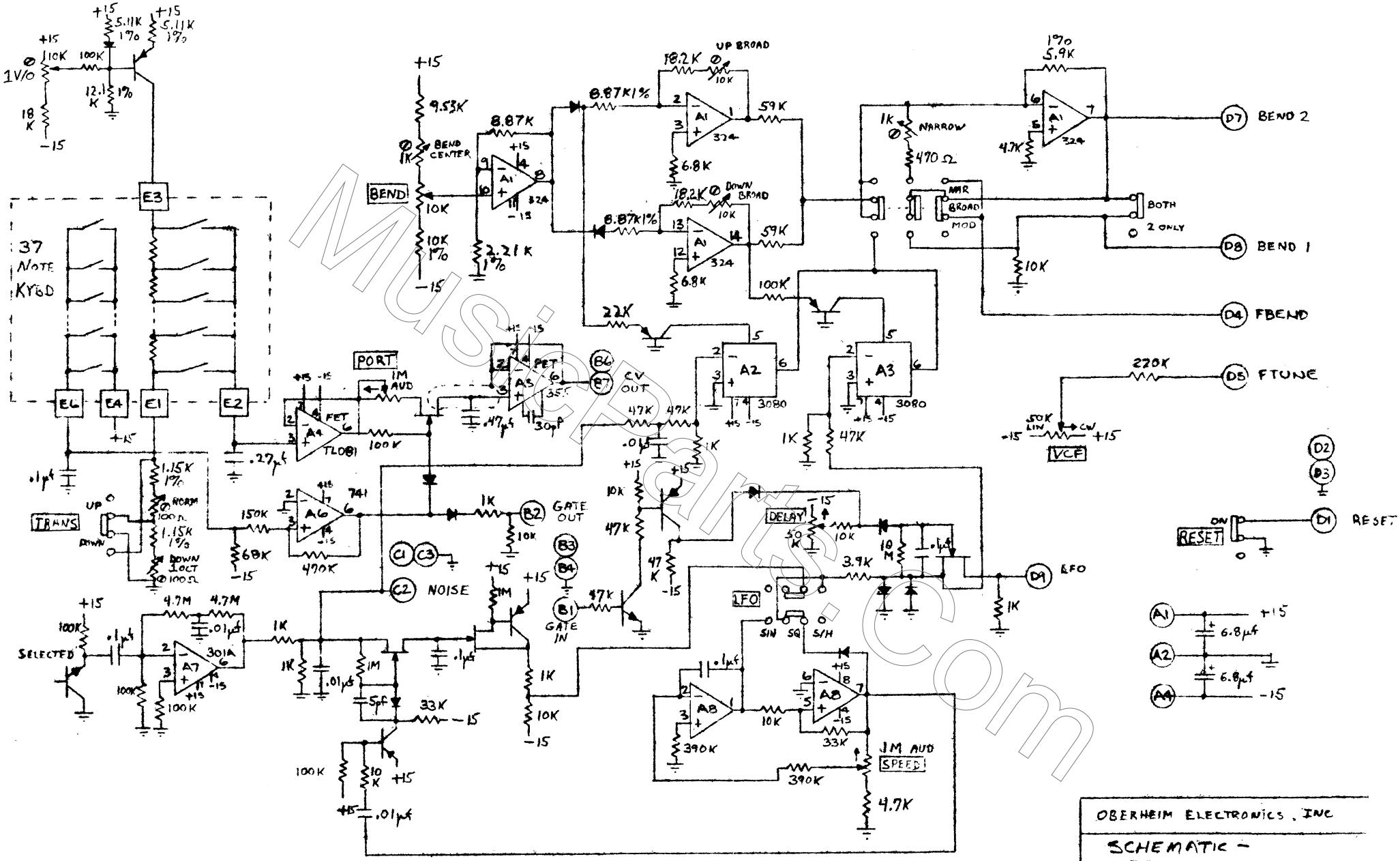
OBERHEIM ELECTRONICS, INC
SCHEMATIC -
OB-1
PERFORMANCE
BOARD
REVISED 12-4-78
1340
MusicPark.com

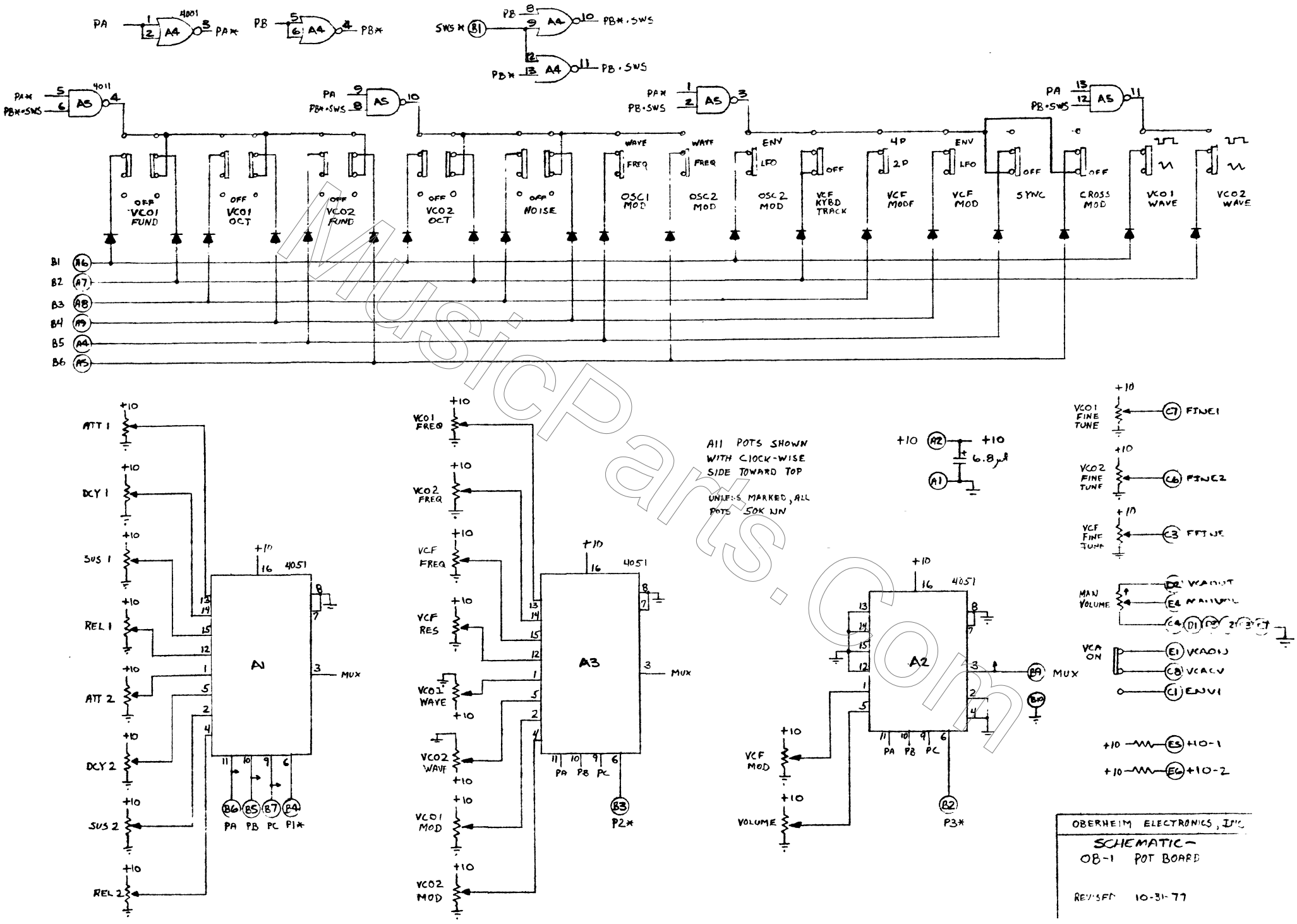

MusicParts.com

OBERHEIM ELECTRONICS, INC.

SCHEMATIC—

OB-1 POT BOARD

REVISED 10-31-77

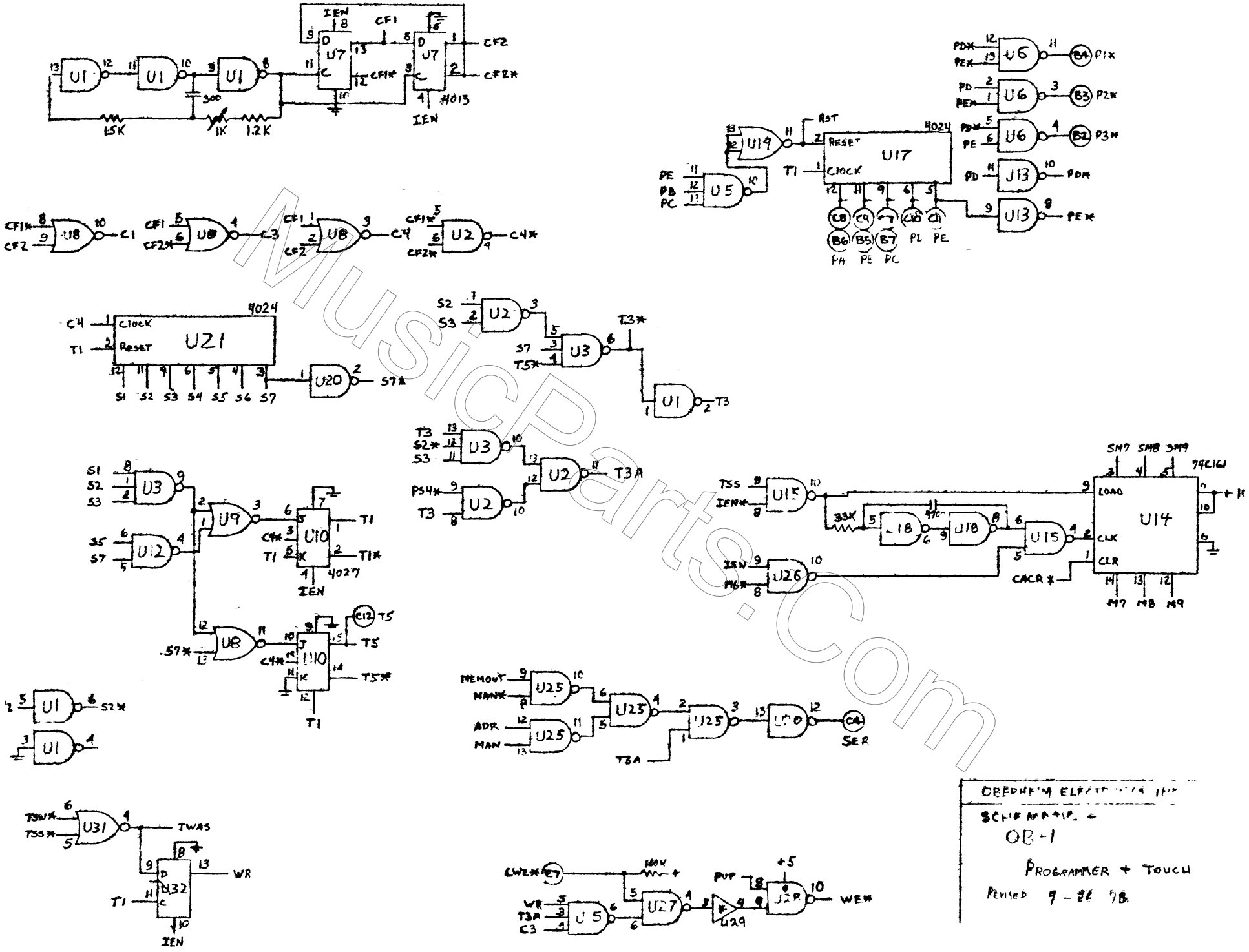

MusicParts.com

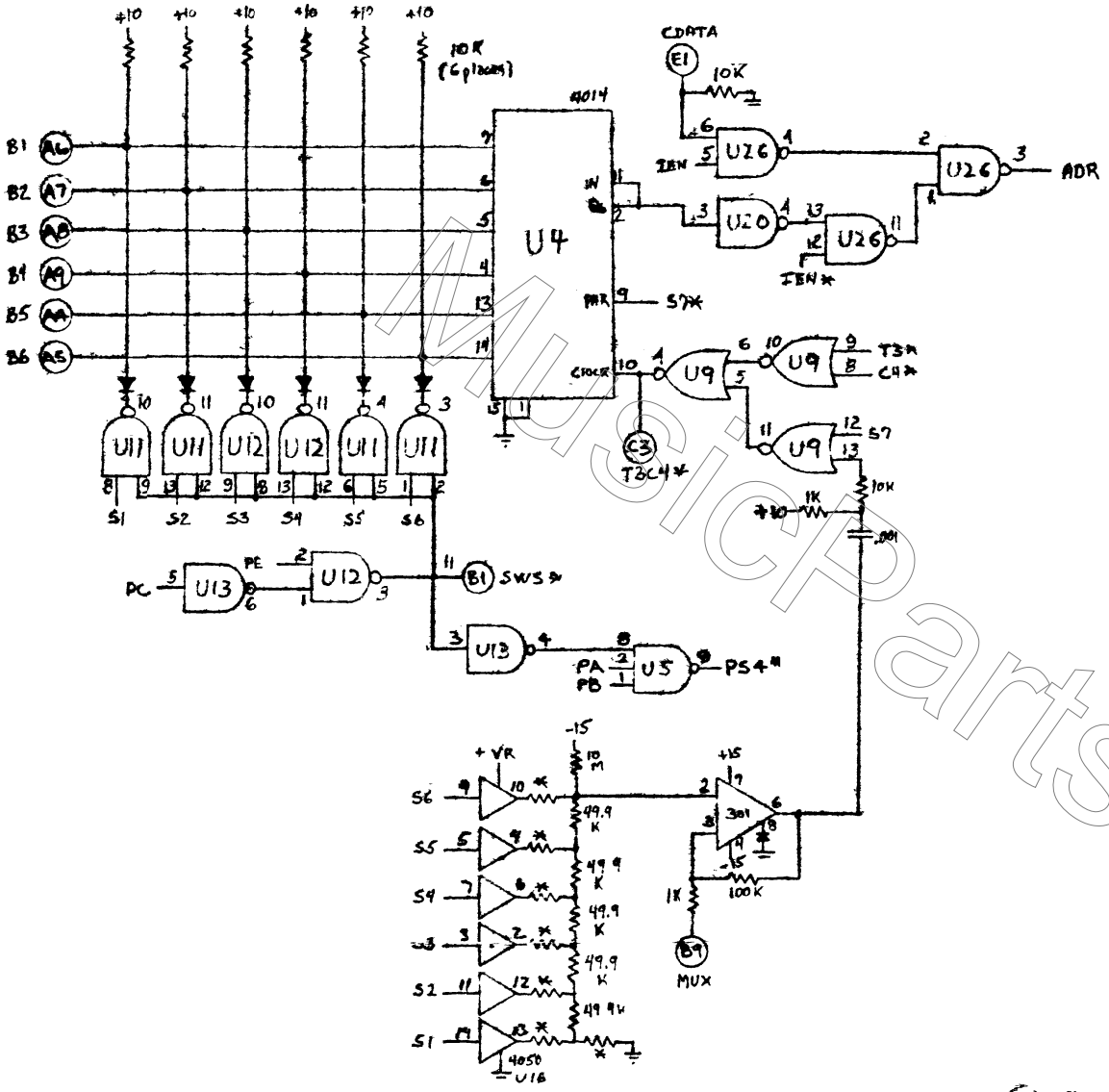

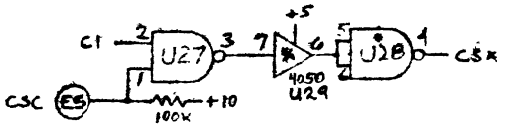

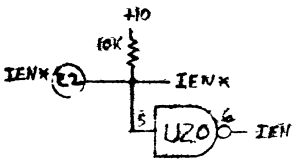

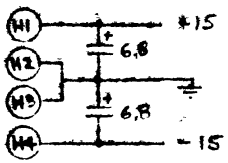

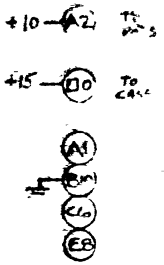

OBERHEIM ELECTRONICS INC.

SCHEMATIC - OB-1

PROGRAMMER + TOUCH

REVISED 9-22-78

MusicParts.com

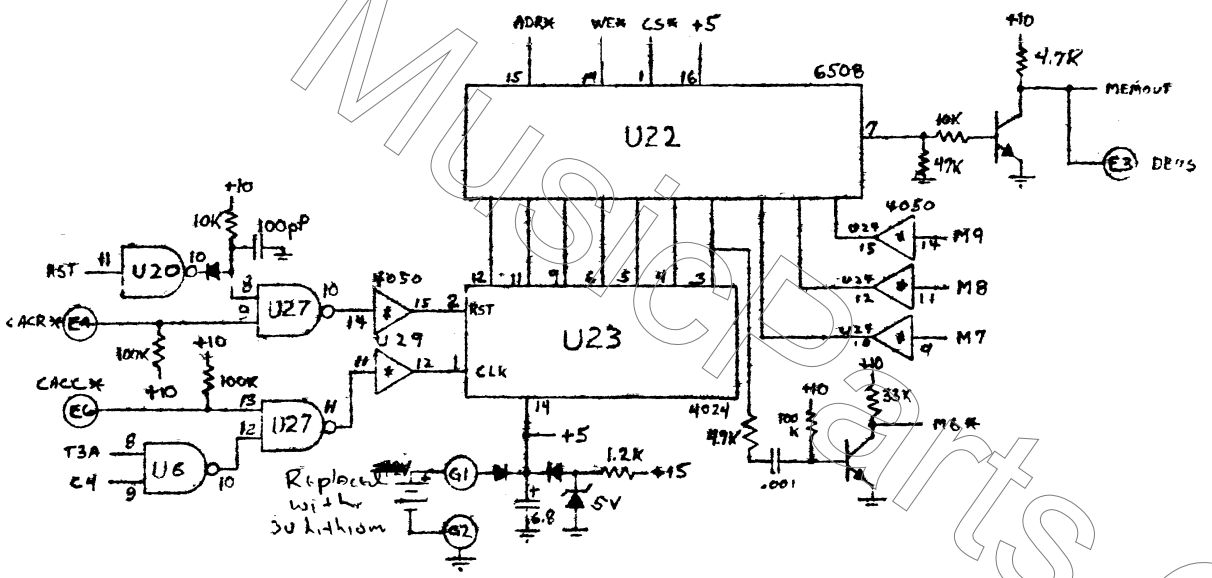

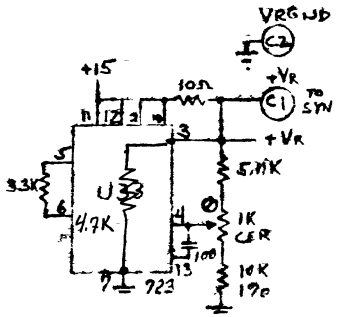

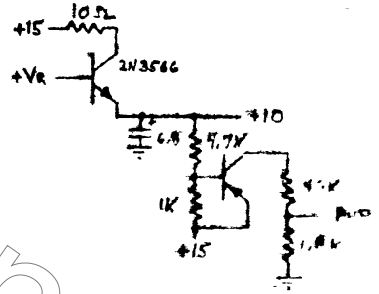

CREDENCE ELECTRONICS LTD

SCHEMATIC

OB-1

PROGRAMMER + TOUCH

REVISED 9 - 22 78

MusicParts.Com

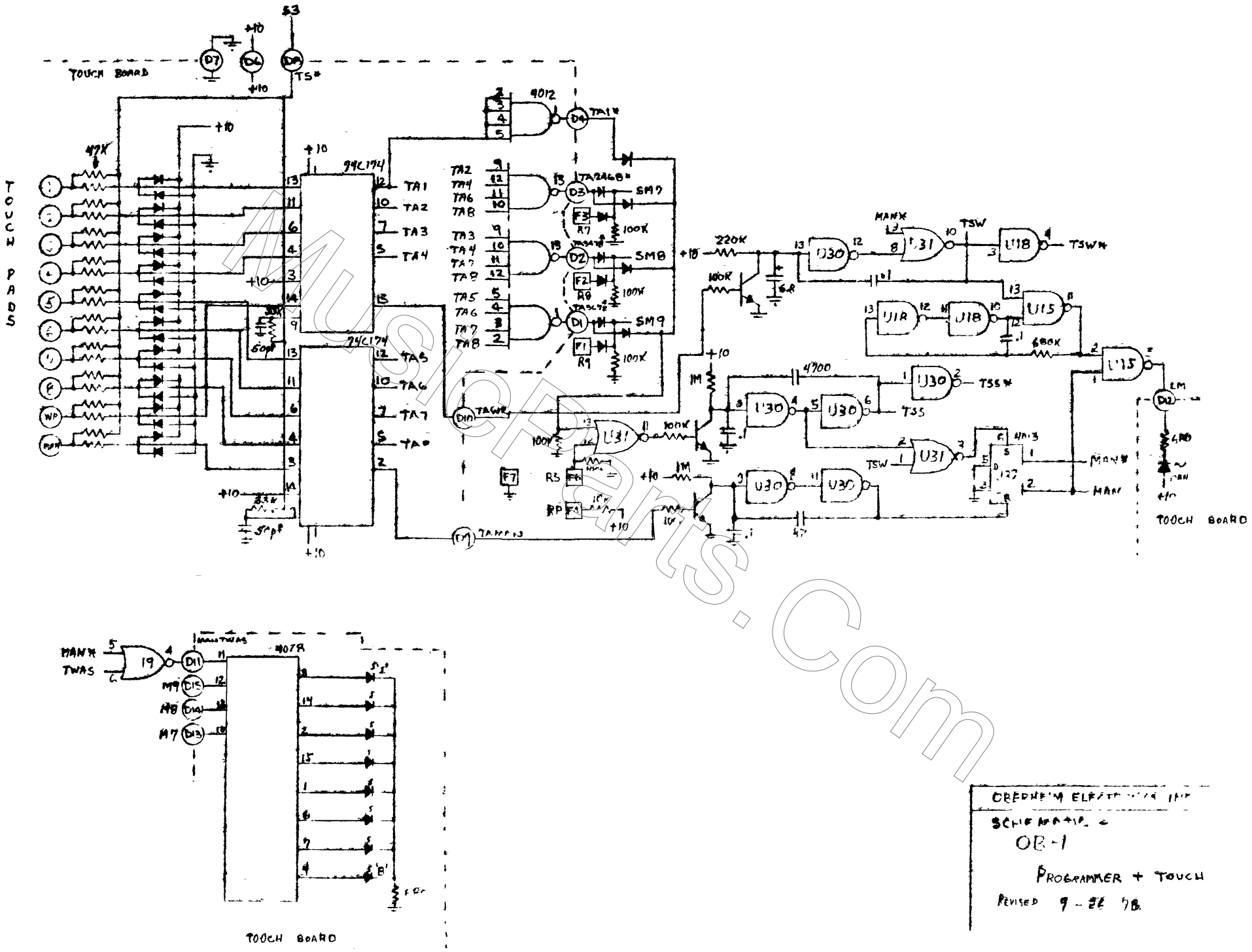

MusicPARTS.Com

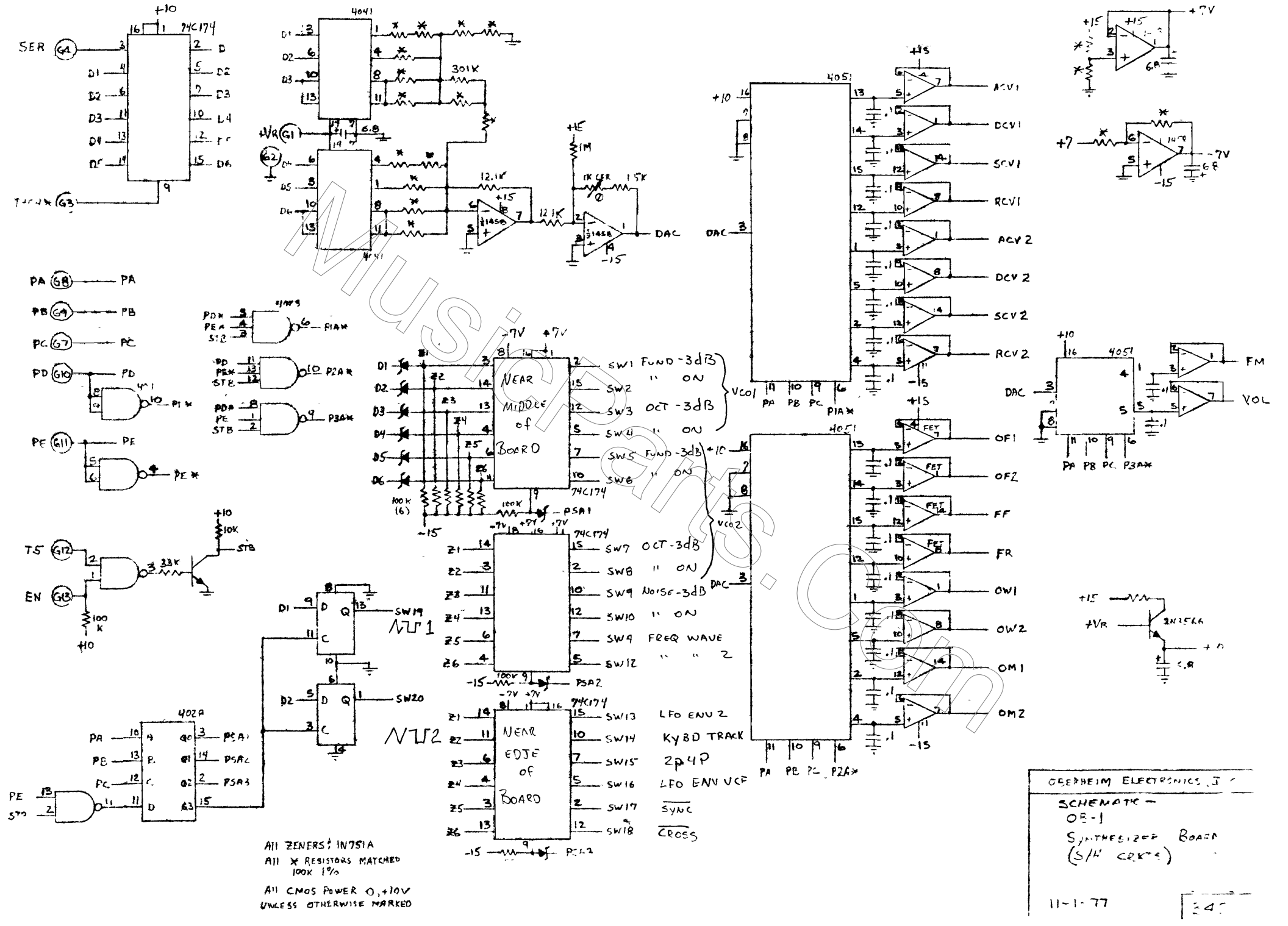

All ZENERS: 1N751A
All * RESISTORS MATCHED 100K 1%
All CMOS POWER 0, +10V UNLESS OTHERWISE MARKED

OBERHEIM ELECTRONICS, INC.
SCHEMATIC —
OB-1
SYNTHESIZER BOARD
(S/H CRKTS)
11-1-77

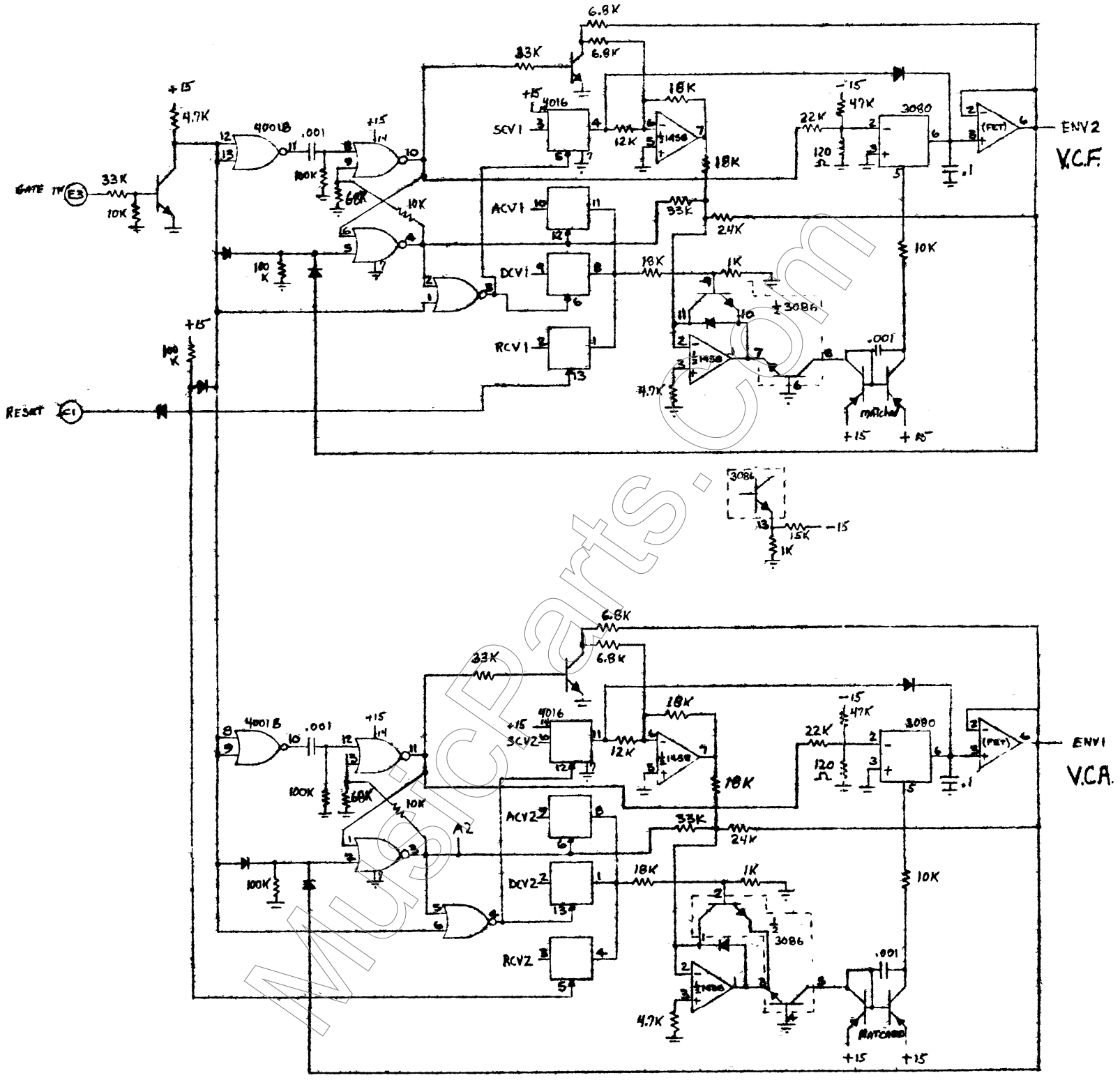

MusicParts.com

Notes:
4001 MUST BE
Buffered

RESISTOR VALUES update 12-11-78

OBERHEIM ELECTRONICS, INC	
SCHEMATIC — 108-1	
SYNTHESIZER BOARD (VCE's)	
4-28-78 REVISED 4-28-78	1342

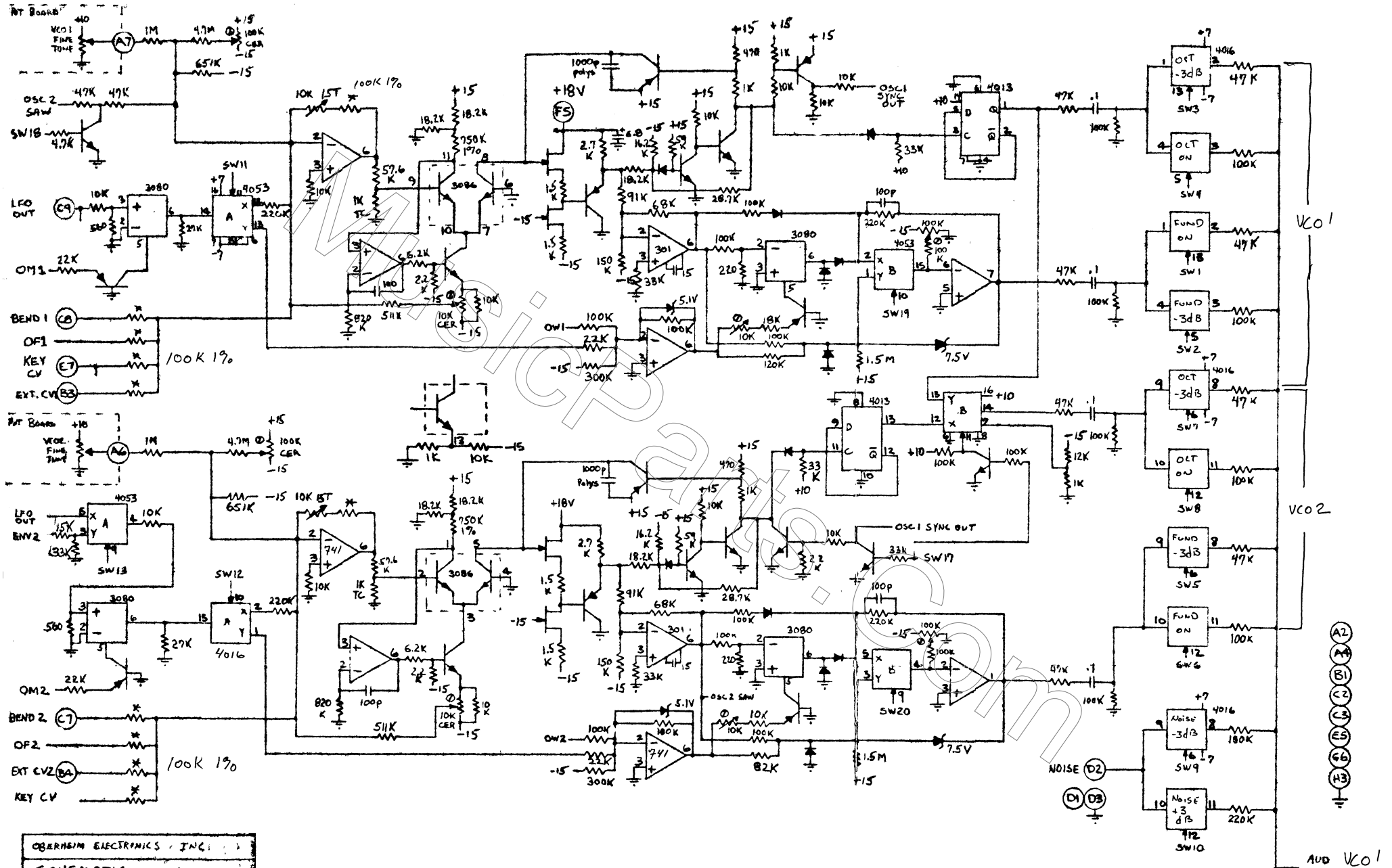

OBERHEIM ELECTRONICS, INC.

SCHEMATIC - OB-1

SYNTHESIZER BOARD

REVISED 9-26-78

1342

MusicPartsCom

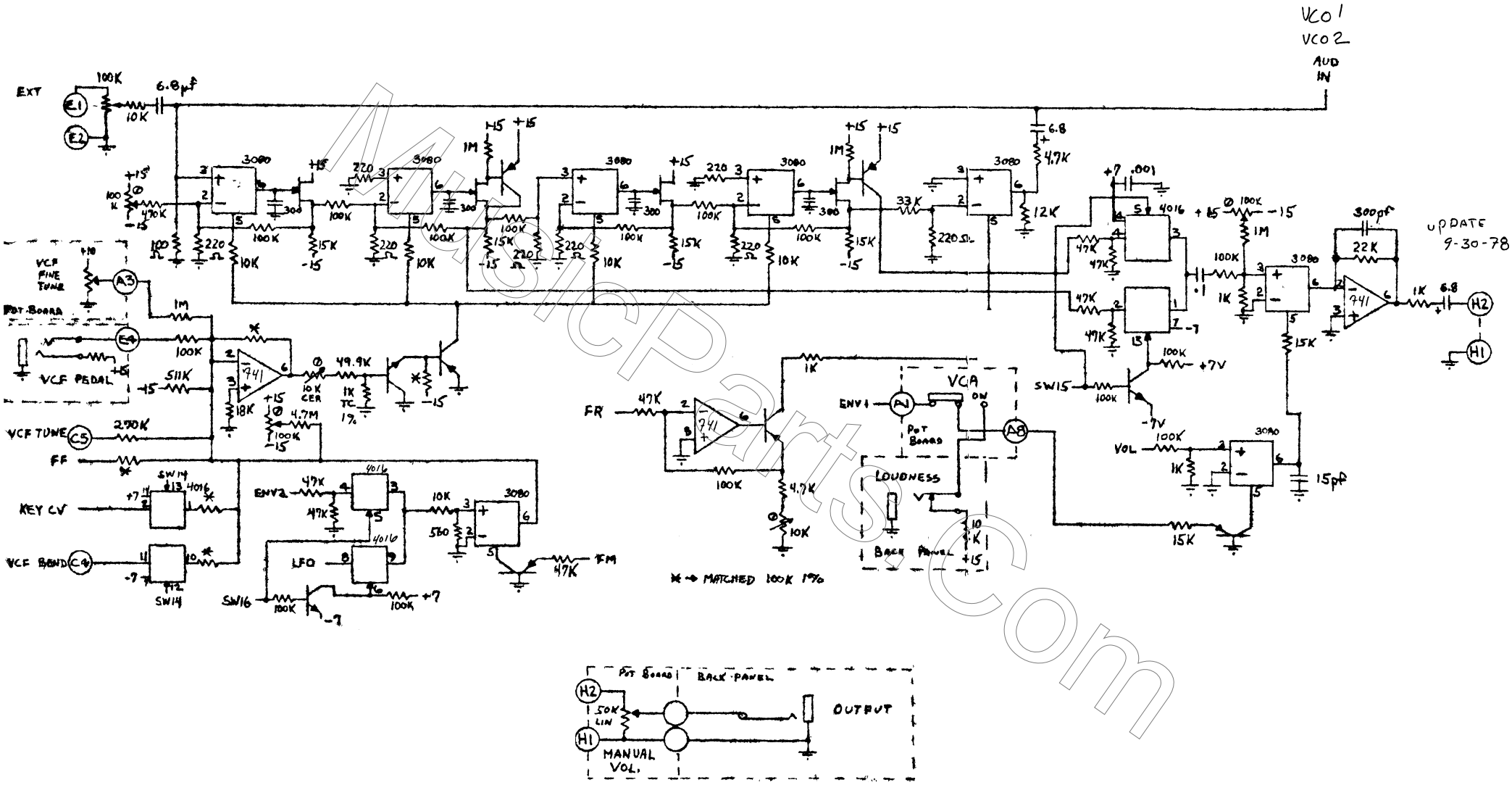

OBERHEIM ELECTRONICS, INC.

SCHEMATIC - OB-1

SYNTHESIZER BOARD

REVISED 9-26-78

1342

MusicPartsCom

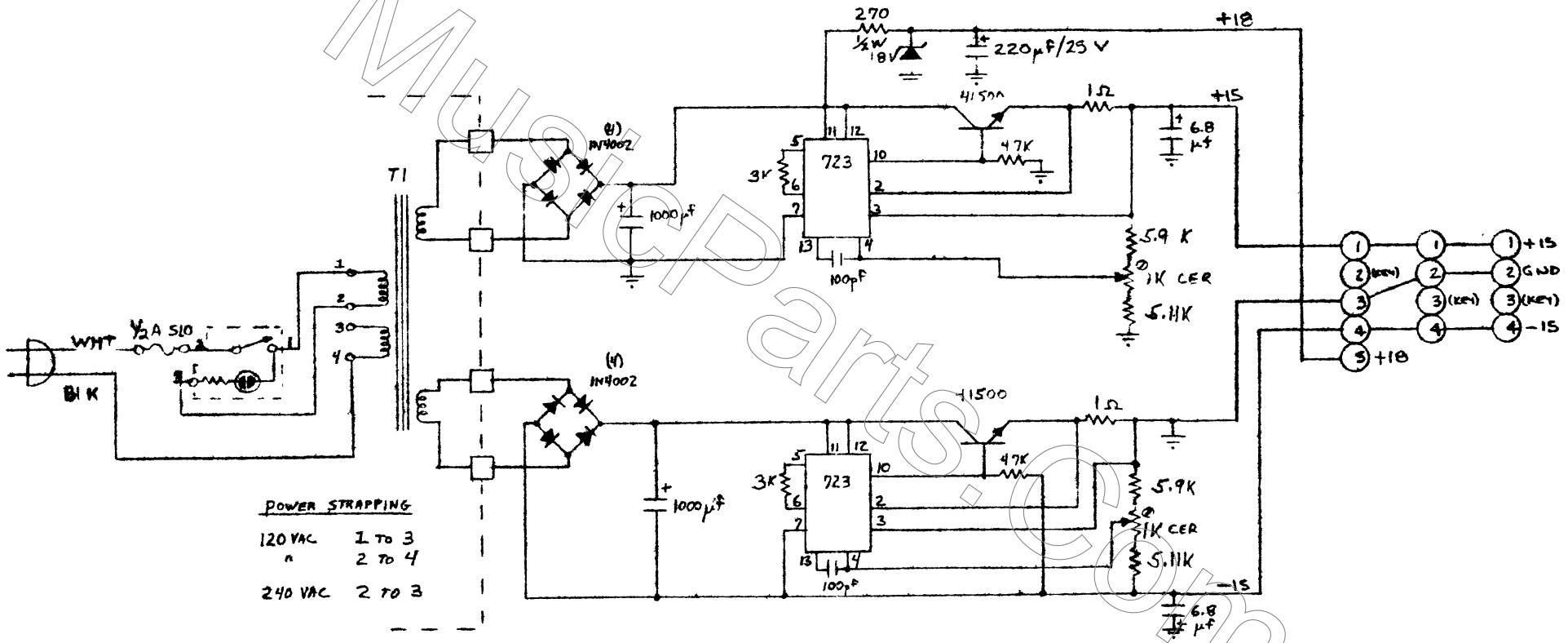

MusicParts.com

OBERHEIM ELECTRONICS, INC

SCHEMATIC —

OB-1

POWER SUPPLY

SEPT 28, 1977

REV 3-27-78

1343

OB-1

1st TEST "0" Pitch Bend ZERO
Measure Pin 8 of 324
Adj. zero for 0.00v ± 0.01v

2ND TEST "+" BROAD ADJUSTMENT
(Switch Broad on) MEASURE C7 ON SYN. BOARD while Pitch Bend is down. ADJUST "BROAD" FOR 1.000 VOLTS ± 0.003

3RD TEST "(-) BROAD ADJ. AS SAME AS ABOVE TEST EXCEPT Pitch BEND is up.

4th TEST "NARROW" ADJ. Switch TO NARROW Position. ADJ. for 0.166 with pitch Bend up ±0.001

5th TEST "E" CONNECTOR Pin 7 KyBD. C.V.
1ST Low "C" for VOLTAGE READING then up 3 OCT. TRANSPOSE Switch in Down Pos.
0.001 ±

MusicParts.com

OB-1

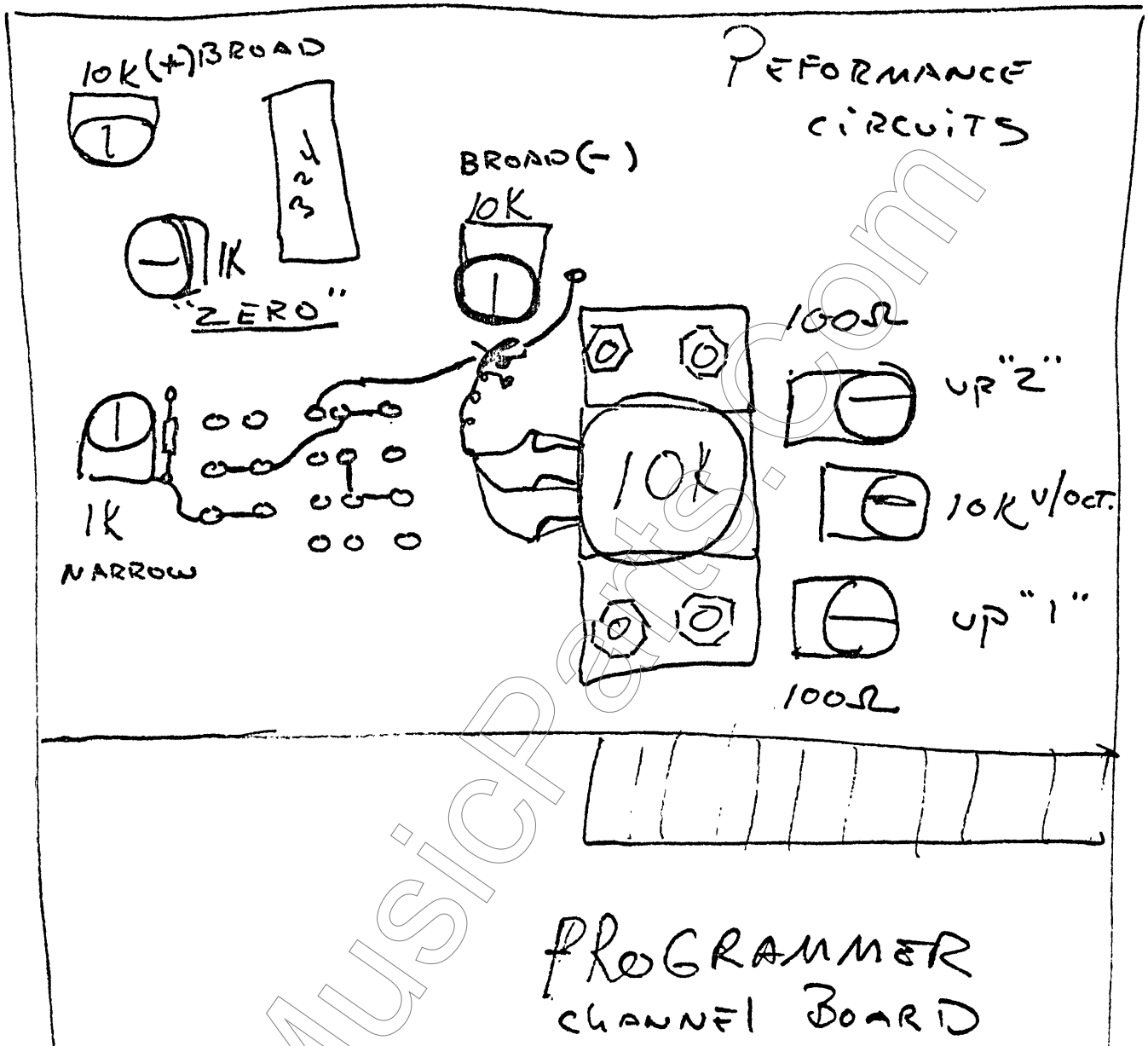

MusicParts.com

OB-1

FRONT →

{kbd octave switching is like old Odyssey}

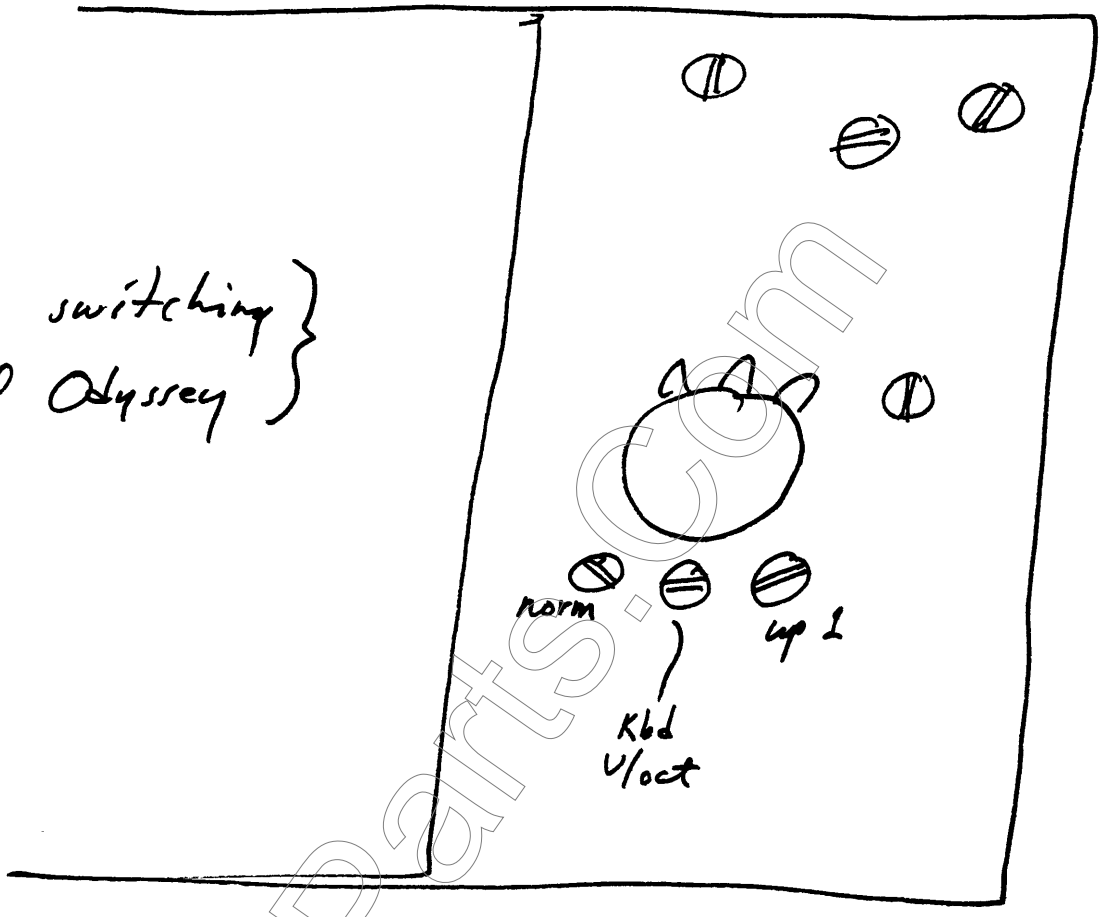

① Set ±15 V power supplies
② set kbd to 1V/oct (3.000 V across whole kbd.)
top of keyboard to gnd: switch in "down 1"
③ switch to "norm": trim for 4.000
④ switch to "up 1": trim for 5.000

This is a good time to tune VCO's:
"Manual" program, VCO tune cntls. full CCW
"down 1", bender centered, all modulations off
Tune VCO's to track kbd using INIT & V/oct

MusicParts.com

OB-1

VOICE BD

FRONT →

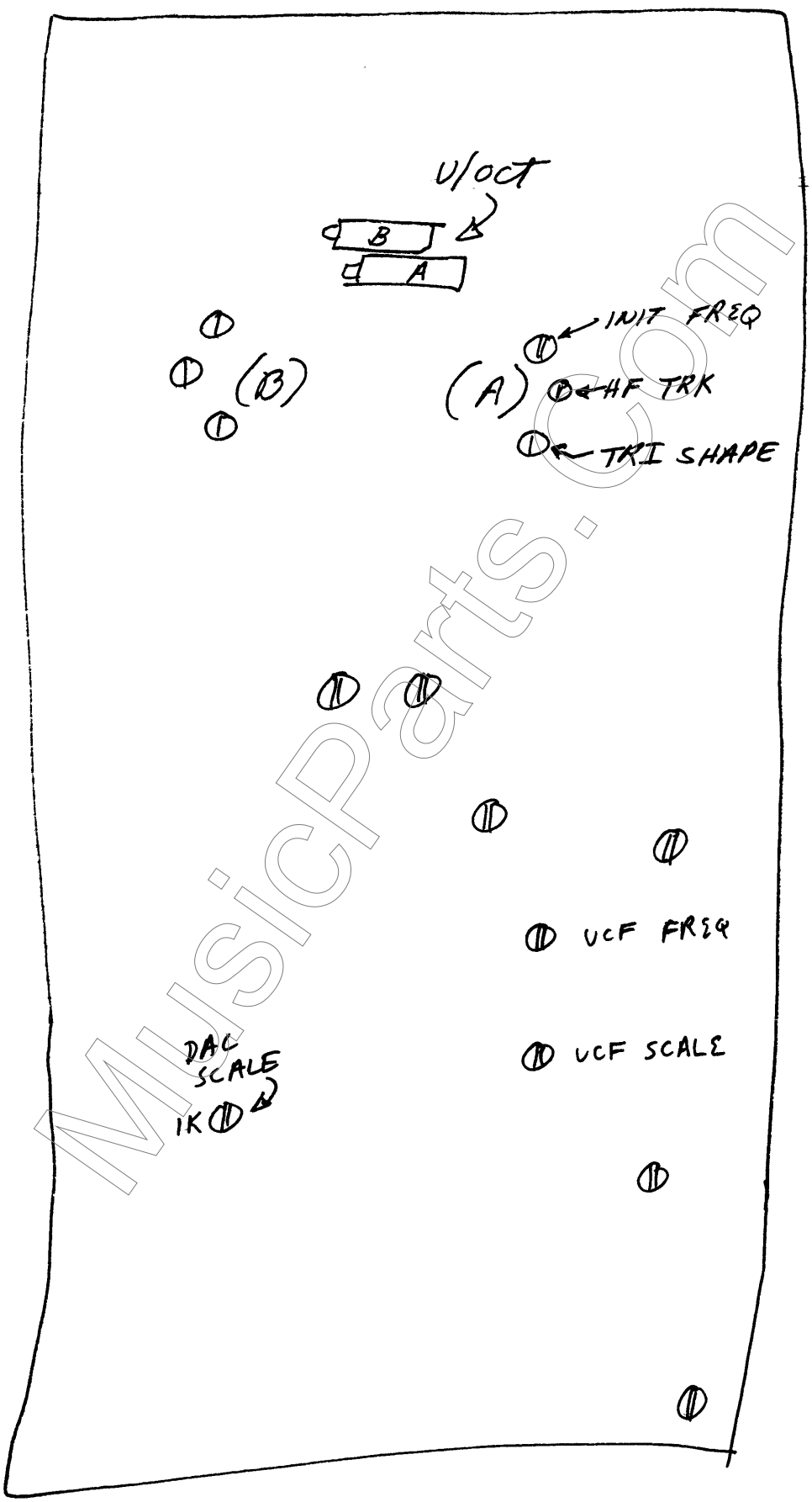

MusicParts.com

OB-1

After kbd & VCO's are set up, DAC scale must be set. Using one tuned VCO: pin 10-C; rotate tune cntl full CW. Trim DAC SCALE for good octave (5 octaves higher). Back off tune to 3 octaves up & trim for perfect. Check all octaves: if any are way out, DAC may be bad (if error is flatting high, then probably just VCO's HF TRK).

MusicParts.com

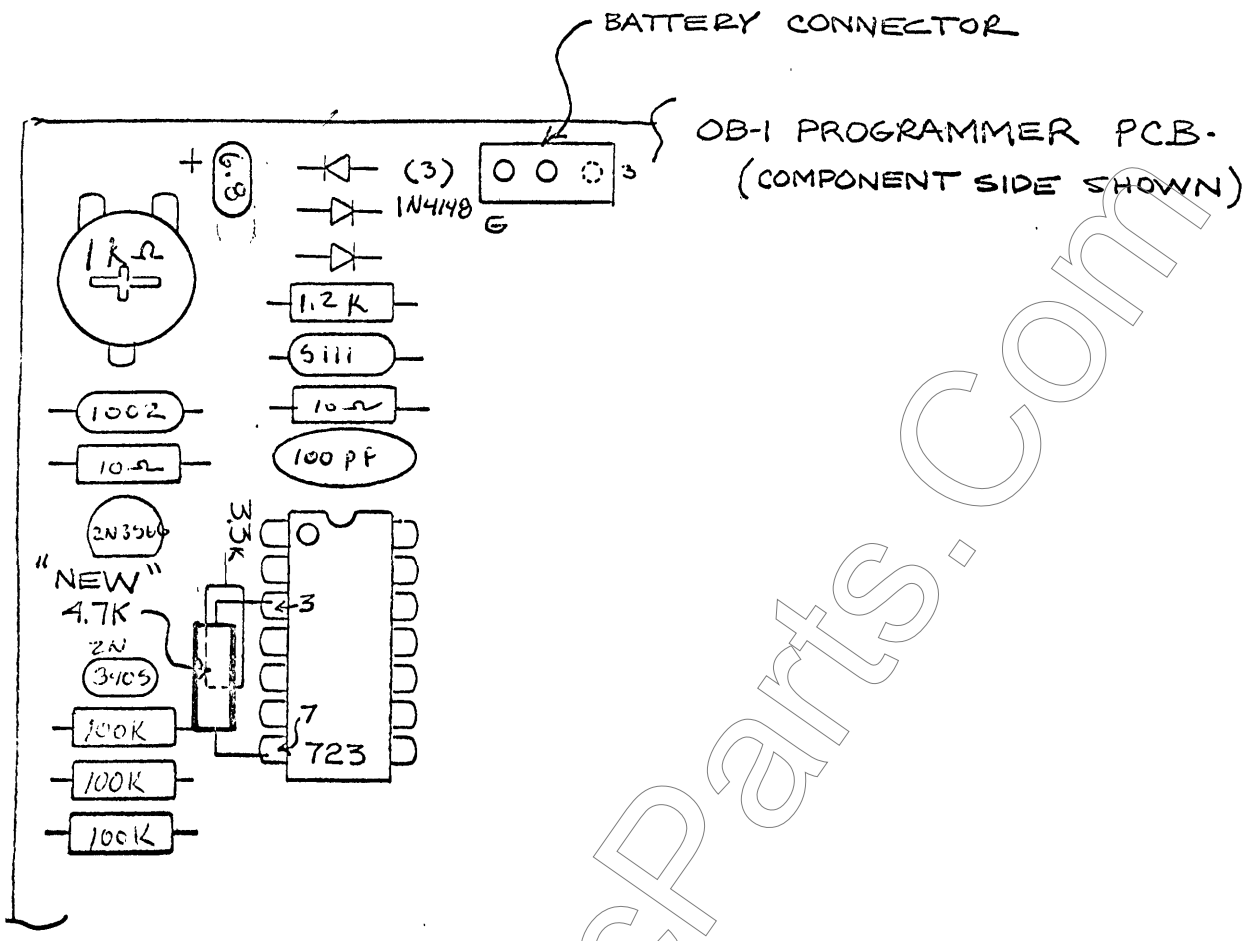

BOARD Nº 1310

TO PREVENT LOW FREQUENCY OSCILLATION OF POWER SUPPLY, ADD A 4.7K 1/4W RESISTOR AS SHOWN AT PINS 3 & 7. OF THE REGULATOR IC [#33 (LM-723)]
Readjust 11.020 ✓

MusicParts.com