AKAI

MODEL VX600

SCHEMATIC DIAGRAMS AND PC BOARDS

TABLE OF CONTENTS

1. MEMORY CARD PC BOARD AND OTHER PC BOARDS 2
2. CONNECTION DIAGRAM 3
3. CPU(1/2) SCHEMATIC DIAGRAM 4
4. CPU PC BOARD 5
5. CPU(2/2) SCHEMATIC DIAGRAM 6
6. CPU PC BOARD 7
7. VOICE SCHEMATIC DIAGRAM 8
8. VOICE PC BOARD 9
9. OPERATION SCHEMATIC DIAGRAM 10
10. OPERATION(A) (B) PC BOARD AND OTHER PC BOARDS 11
11. CPU SECTION BLOCK DIAGRAM 12
12. VOICE SECTION BLOCK DIAGRAM 13
13. IC'S 14

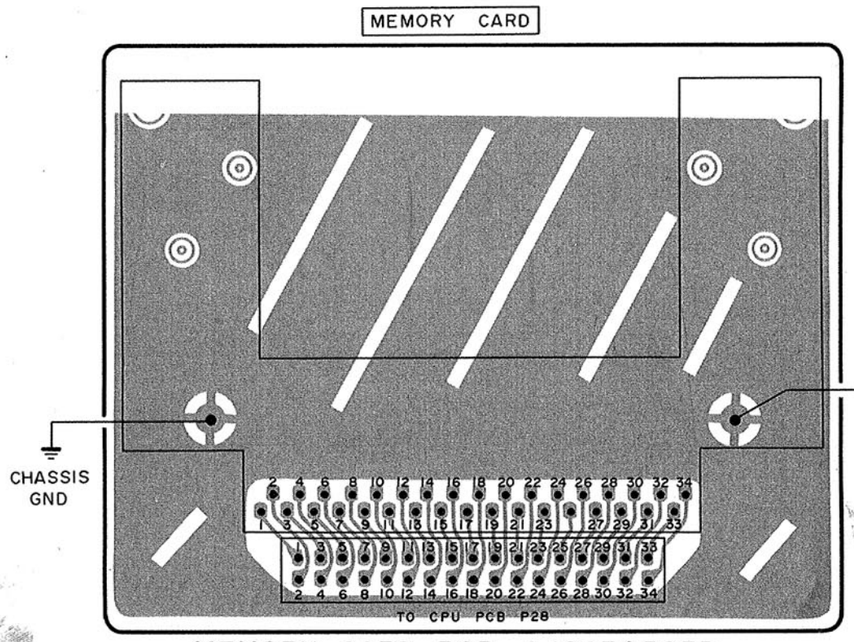

MEMORY CARD PCB L1023A503D

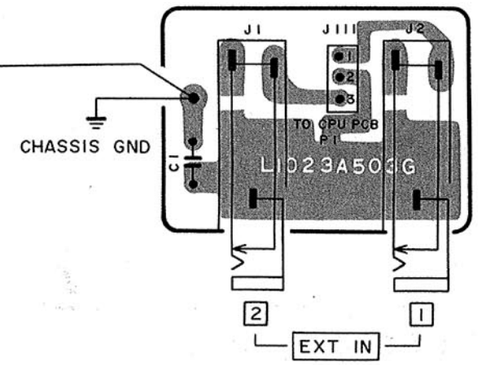

EXT IN JACK PCB
L1023A503G

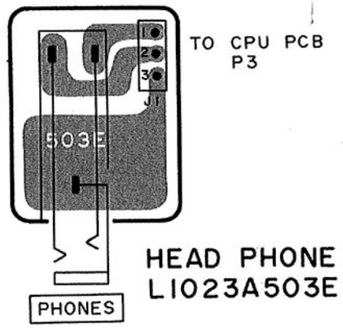

HEAD PHONE PC
L1023A503E

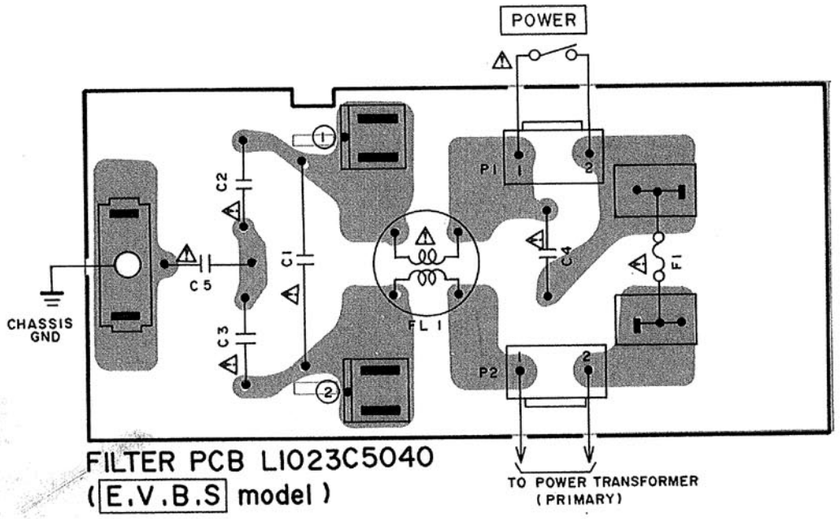

FILTER PCB L1023C5040
(E.V.B.S model)

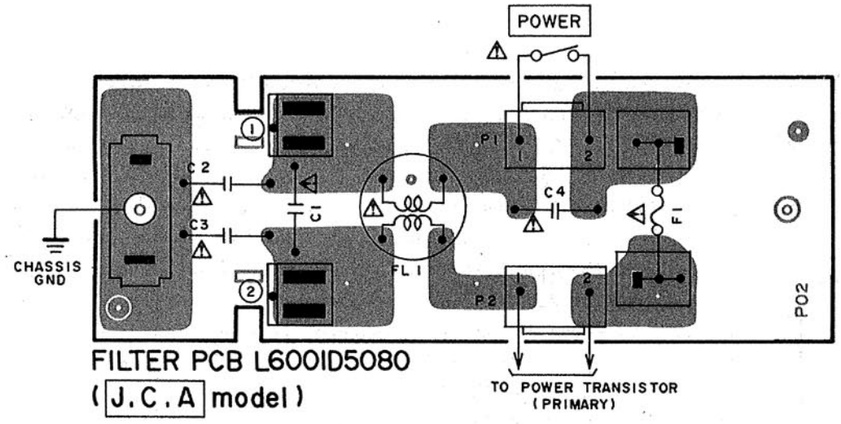

FILTER PCB L6001D5080
(J.C.A model)

WARNING: ⚠ INDICATES SAETY CRITICAL COMPONENTS FOR CONTINUED SAFETY.
REPLACE SAFETY CRITICAL COMPONENTS ONLY WITH MANUFACTURER'S
RECOMMENDED ARTS

AVERTISSEMENT: ⚠ IL INDIQUE LES COMPOSANTS CRITIQUES DE SÉCURITÉ.
POUR MAINTENIR LE DEGRÉ DE SÉCURITÉ DE L'APPAREIL,
NE REMPLACER QUE DES PIÈCES RECOMMANDEES PAR LE FABRICANT

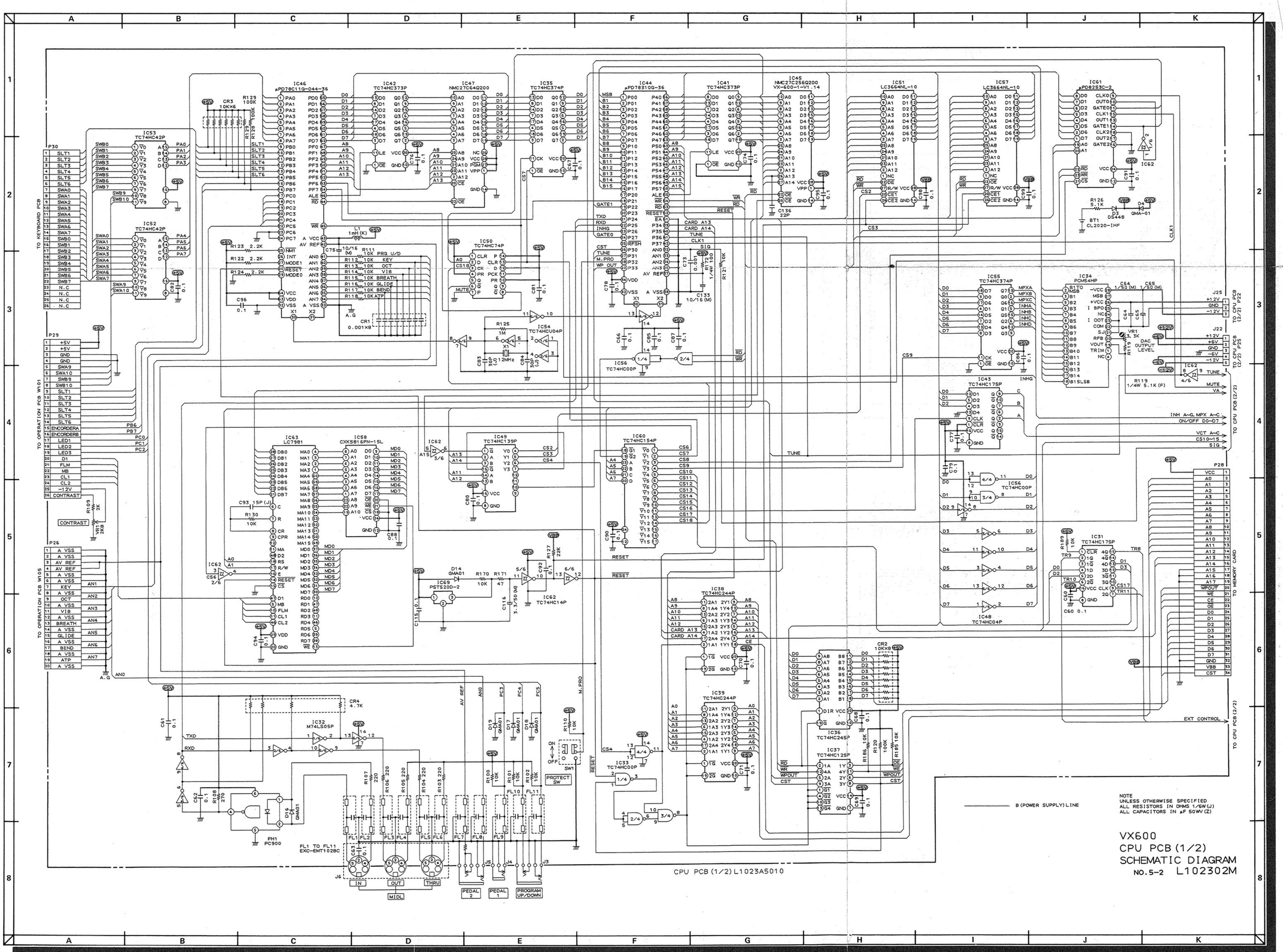
IC46 μPD78C11G-044-36
IC42 TC74HC373P
IC47 NMC27C64Q200
IC35 TC74HC374P
IC44 μPD78310G-36
IC41 TC74HC373P
IC45 NMC27C256Q200 VX-600-1-V1.14
IC51 LC3664NL-10
IC57 LC3664NL-10
IC61 μPD8253C-2
IC53 TC74HC42P
IC52 TC74HC42P
IC50 TC74HC74P
IC54 TC74HC04P
IC56 TC74HC00P
IC55 TC74HC374P
IC34 PCM54HP
IC43 TC74HC175P
IC63 LC7981
IC58 CXK5816PN-15L
IC49 TC74HC139P
IC60 TC74HC154P
IC69 PST5200-2
IC62 TC74HC14P
IC38 TC74HC244P
IC39 TC74HC244P
IC36 TC74HC245P
IC37 TC74HC125P
IC48 TC74HC04P
IC31 TC74HC175P
IC32 M74LS05P
IC33 TC74HC00P
TO KEYBOARD PCB
TO OPERATION PCB W101
TO OPERATION PCB W105
TO CPU PCB (2/2) P22
TO CPU PCB (2/2) P25
TO CPU PCB (2/2)
TO MEMORY CARD
EXT CONTROL
PROTECT SW
MIDI
PEDAL 2
PEDAL 1
PROGRAM UP/DOWN
B (POWER SUPPLY) LINE
NOTE
UNLESS OTHERWISE SPECIFIED
ALL RESISTORS IN OHMS 1/6W (J)
ALL CAPACITORS IN μF 50WV (Z)
VX600
CPU PCB (1/2)
SCHEMATIC DIAGRAM
NO.5-2 L102302M
CPU PCB (1/2) L1023A5010

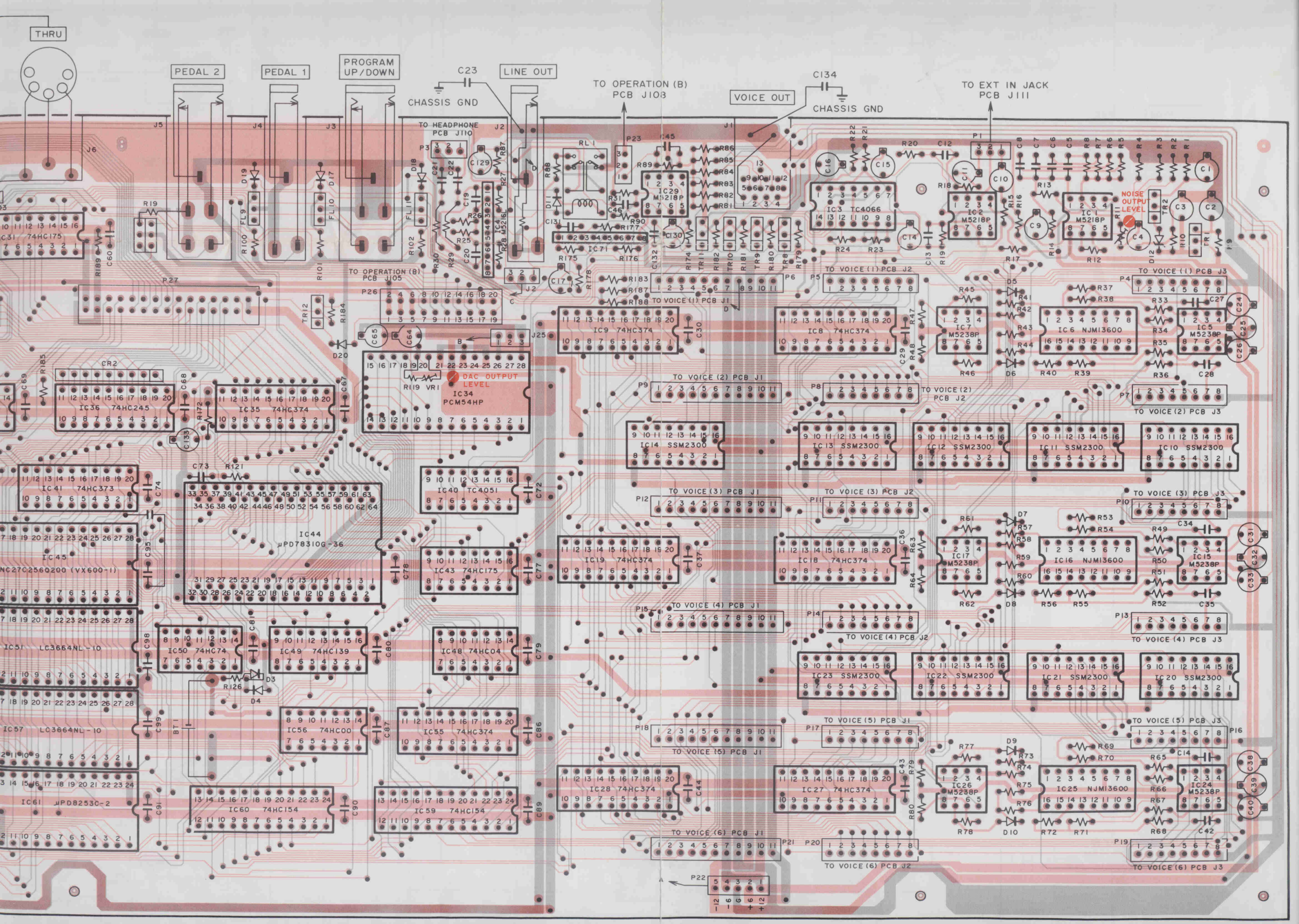
THRU
PEDAL 2
PEDAL 1
PROGRAM UP/DOWN
C23
CHASSIS GND
LINE OUT
TO OPERATION (B) PCB J103
VOICE OUT
C134
CHASSIS GND
TO EXT IN JACK PCB J111
TO HEADPHONE PCB J110
TO OPERATION (B) PCB J105
NOISE OUTPUT LEVEL
DAC OUTPUT LEVEL
IC34 PCM54HP
IC44 μPD78310G-36
IC45 NC27C2560200 (VX600-1)
IC51 LC3664NL-10
IC57 LC3664NL-10
IC61 μPD8253C-2
IC29 M5218P
IC1 M5218P
IC2 M5218P
IC3 TC4066
IC9 74HC374
IC8 74HC374
IC19 74HC374
IC18 74HC374
IC28 74HC374
IC27 74HC374
IC14 SSM2300
IC13 SSM2300
IC12 SSM2300
IC11 SSM2300
IC10 SSM2300
IC23 SSM2300
IC22 SSM2300
IC21 SSM2300
IC20 SSM2300
IC6 NJM3600
IC16 NJM3600
IC25 NJM3600
IC7 M5238P
IC15 M5238P
IC24 M5238P
IC17 M5238P
IC26 M5238P
IC36 74HC245
IC35 74HC374
IC41 74HC373
IC40 TC4051
IC43 74HC175
IC50 74HC74
IC49 74HC139
IC48 74HC04
IC56 74HC00
IC55 74HC374
IC60 74HC154
IC59 74HC154
IC31 74HC175
TO VOICE (1) PCB J1
TO VOICE (1) PCB J2
TO VOICE (1) PCB J3
TO VOICE (2) PCB J1
TO VOICE (2) PCB J2
TO VOICE (2) PCB J3
TO VOICE (3) PCB J1
TO VOICE (3) PCB J2
TO VOICE (3) PCB J3
TO VOICE (4) PCB J1
TO VOICE (4) PCB J2
TO VOICE (4) PCB J3
TO VOICE (5) PCB J1
TO VOICE (5) PCB J3
TO VOICE (6) PCB J1
TO VOICE (6) PCB J2
TO VOICE (6) PCB J3

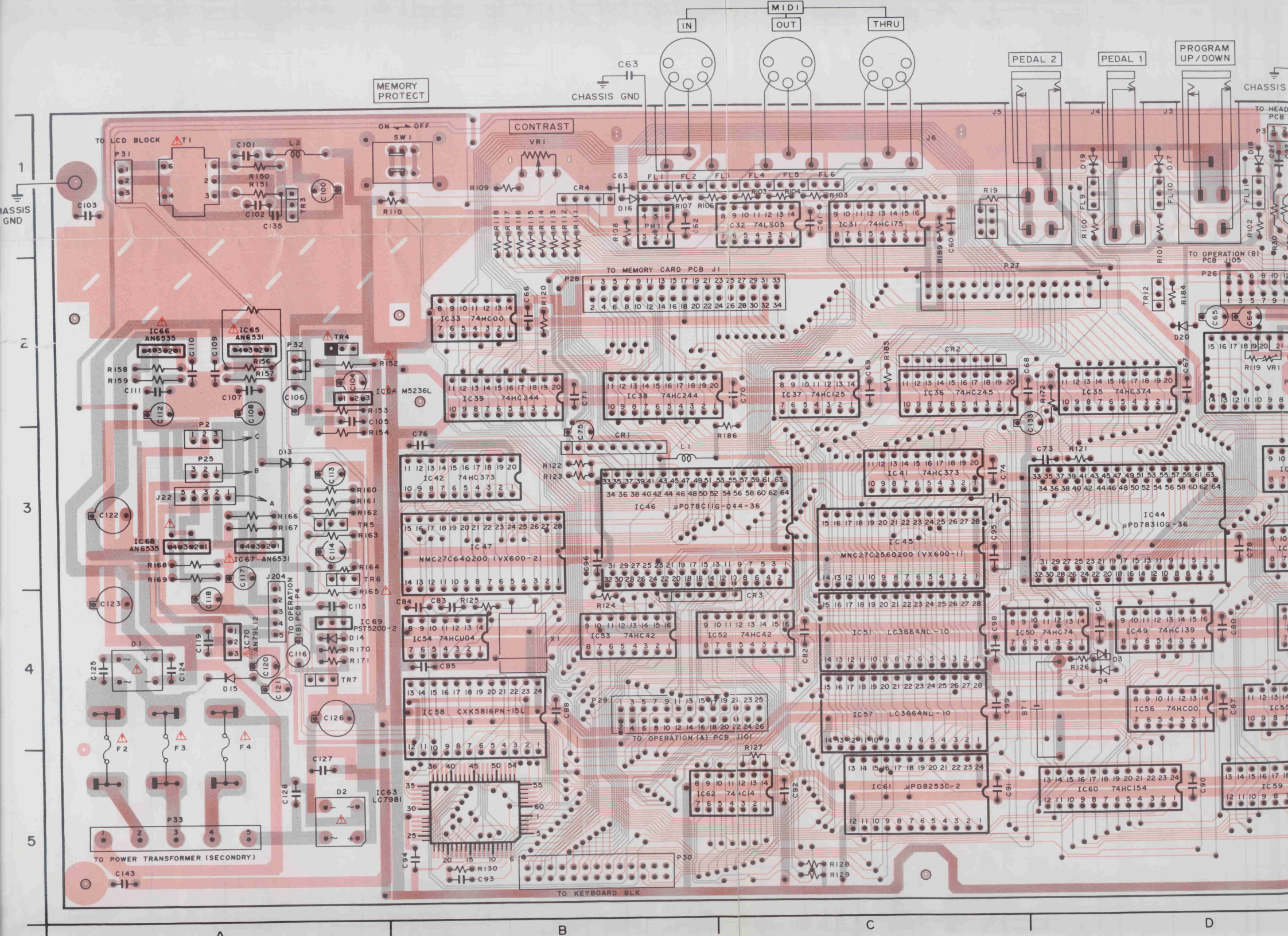
MIDI
IN
OUT
THRU
PEDAL 2
PEDAL 1
PROGRAM UP/DOWN
CHASSIS GND
MEMORY PROTECT
CONTRAST
ON OFF
SW1
VR1
TO LCD BLOCK
P31
T1
L2
TR3
TR4
TR5
TR6
TR7
IC66 AN6535
IC65 AN6531
IC64 M5236L
IC68 AN6535
IC67 AN6531
IC69 PST520D-2
IC70 AN79L12
P32
P2
P25
J22
J204
TO OPERATION (B) PCB P4
D1
D2
D13
D14
D15
F2
F3
F4
P33
TO POWER TRANSFORMER (SECONDRY)
IC63 LC7981
IC47 NMC27C640200 (VX600-2)
IC46 μPD78C11G-044-36
IC45 MNC27C256Q200 (VX600-1)
IC44 μPD78310G-36
IC51 LC3664NL-10
IC57 LC3664NL-10
IC61 μPD8253C-2
IC58 CXK5816PN-15L
IC54 74HCU04
IC53 74HC42
IC52 74HC42
IC62 74HC14
IC33 74HC00
IC39 74HC244
IC38 74HC244
IC42 74HC373
IC41 74HC373
IC37 74HC125
IC36 74HC245
IC35 74HC374
IC31 74HC175
IC32 74LS05
IC50 74HC74
IC49 74HC139
IC56 74HC00
IC60 74HC154
IC59
P28
TO MEMORY CARD PCB J1
P29
TO OPERATION (A) PCB J101
P30
TO KEYBOARD BLK
P27
TO OPERATION (B) PCB J105
P26
TO HEAD PCB
CR1
CR2
CR3
CR4
PH1
X1
L1
BT1
J5
J4
J3
J6

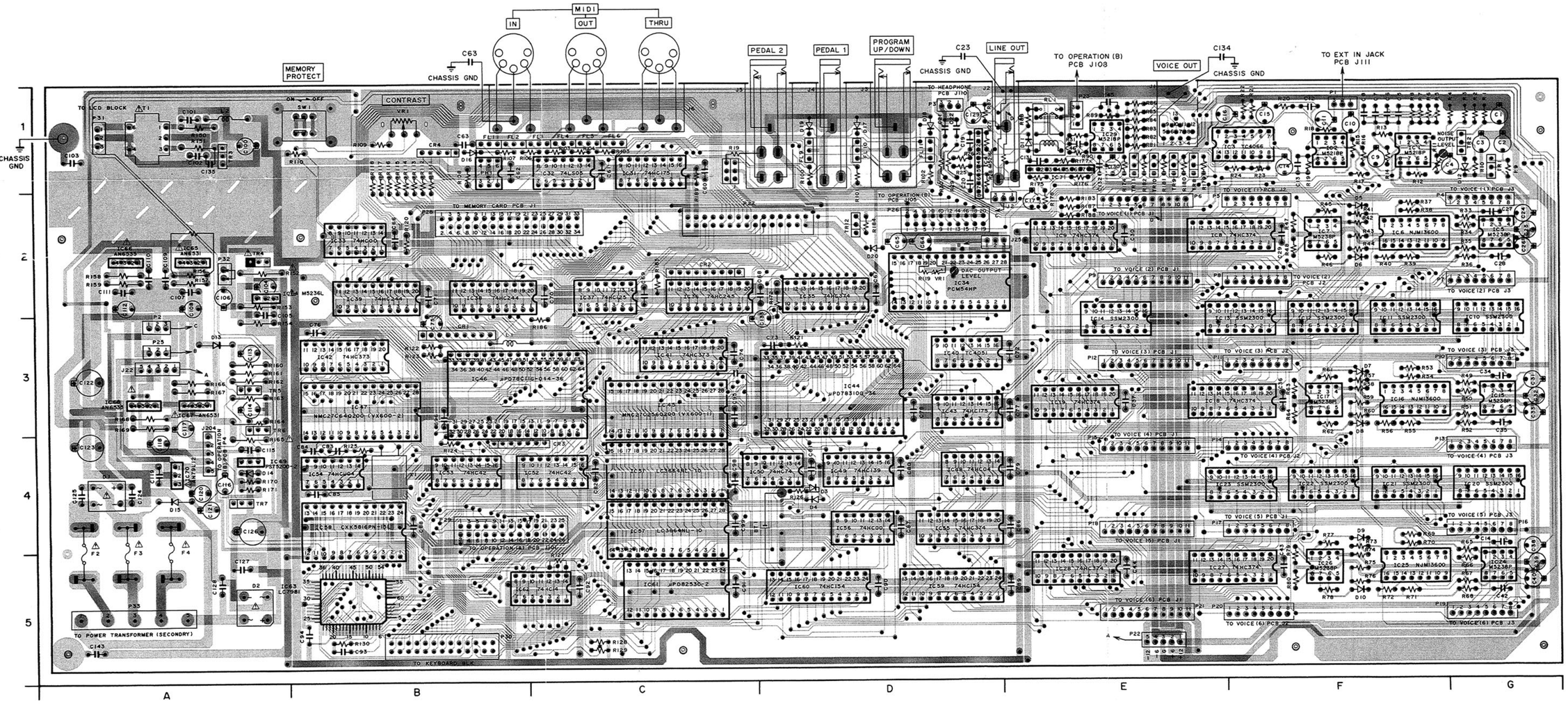

CPU PCB L1023A5010

LOCATION OF COMPONENT

IC

IC 1 ····· F1
IC 2 ····· F1
IC 3 ····· E,F1
IC 4 ····· D,E2
IC 5 ····· G2
IC 6 ····· F2
IC 7 ····· F2
IC 8 ····· E,F2
IC 9 ····· E2
IC10 ····· G3
IC11 ····· F3
IC12 ····· F3
IC13 ····· E,F3
IC14 ····· E3
IC15 ····· G3
IC16 ····· F3
IC17 ····· F3
IC18 ····· E,F3
IC19 ····· E3
IC20 ····· G4
IC21 ····· F4
IC22 ····· F4
IC23 ····· E,F4
IC24 ····· G5
IC25 ····· F5
IC26 ····· F5
IC27 ····· E,F5
IC28 ····· E5
IC29 ····· E1
IC31 ····· C1
IC32 ····· C1
IC33 ····· B2
IC34 ····· D2
IC35 ····· D2
IC36 ····· C2
IC37 ····· C2
IC38 ····· B2
IC39 ····· B2
IC40 ····· D3
IC41 ····· C3
IC42 ····· B3
IC43 ····· D3
IC44 ····· D3
IC45 ····· C3
IC46 ····· B,C3
IC47 ····· B3
IC48 ····· D4
IC49 ····· D4
IC50 ····· C,D4
IC51 ····· C4
IC52 ····· B,C4
IC53 ····· B4
IC54 ····· B4
IC55 ····· D4
IC56 ····· D4
IC57 ····· C4
IC58 ····· B4
IC59 ····· D5
IC60 ····· D5
IC61 ····· C5
IC62 ····· B,C5
IC63 ····· B5
IC64 ····· A2
IC65 ····· A2
IC66 ····· A2
IC67 ····· A3
IC68 ····· A3
IC69 ····· A4
IC70 ····· A4
IC71 ····· E1

TRANSISTOR

TR 1 ····· G1
TR 2 ····· G1
TR 3 ····· A1
TR 4 ····· A2
TR 5 ····· A3
TR 6 ····· A3
TR 7 ····· A4
TR 8 ····· E1
TR 9 ····· E1
TR10 ····· E1
TR11 ····· E1
TR12 ····· D2

CONNECTOR

P 1 ····· F1
P 2 ····· A3
P 3 ····· D1
P 4 ····· F,G2
P 5 ····· E,F2
P 6 ····· E2
P 7 ····· F,G2
P 8 ····· E,F2
P 9 ····· E2
P10 ····· G3
P11 ····· E,F3
P12 ····· E3
P13 ····· F,G4
P14 ····· E,F4
P15 ····· E4
P16 ····· F,G4
P17 ····· E,F4
P18 ····· E4
P19 ····· F,G5
P20 ····· E,F5
P21 ····· E5
P22 ····· E5
P23 ····· E1
P25 ····· A3
P26 ····· D2
P27 ····· C,D2
P28 ····· B,C2
P29 ····· B,C4
P30 ····· B5
P31 ····· A1
P32 ····· A2
P33 ····· A5
J2 ····· D,E2
J22 ····· A3
J25 ····· D,E2
J204 ····· A4

B
PNP TRANSISTOR

B
NPN TRANSISTOR

WARNING: ⚠ INDICATES SAFETY CRITICAL COMPONENTS FOR CONTINUED SAFETY. REPLACE SAFETY CRITICAL COMPONENTS ONLY WITH MANUFACTURER'S RECOMMENDED PARTS

AVERTISSEMENT: ⚠ IL INDIQUE LES COMPOSANTS CRITIQUES DE SÉCURITÉ. POUR MAINTENIR LE DEGRÉ DE SÉCURITÉ DE L'APPAREIL, NE REMPLACER QUE DES PIÈCES RECOMMANDEES PAR LE FABRICANT

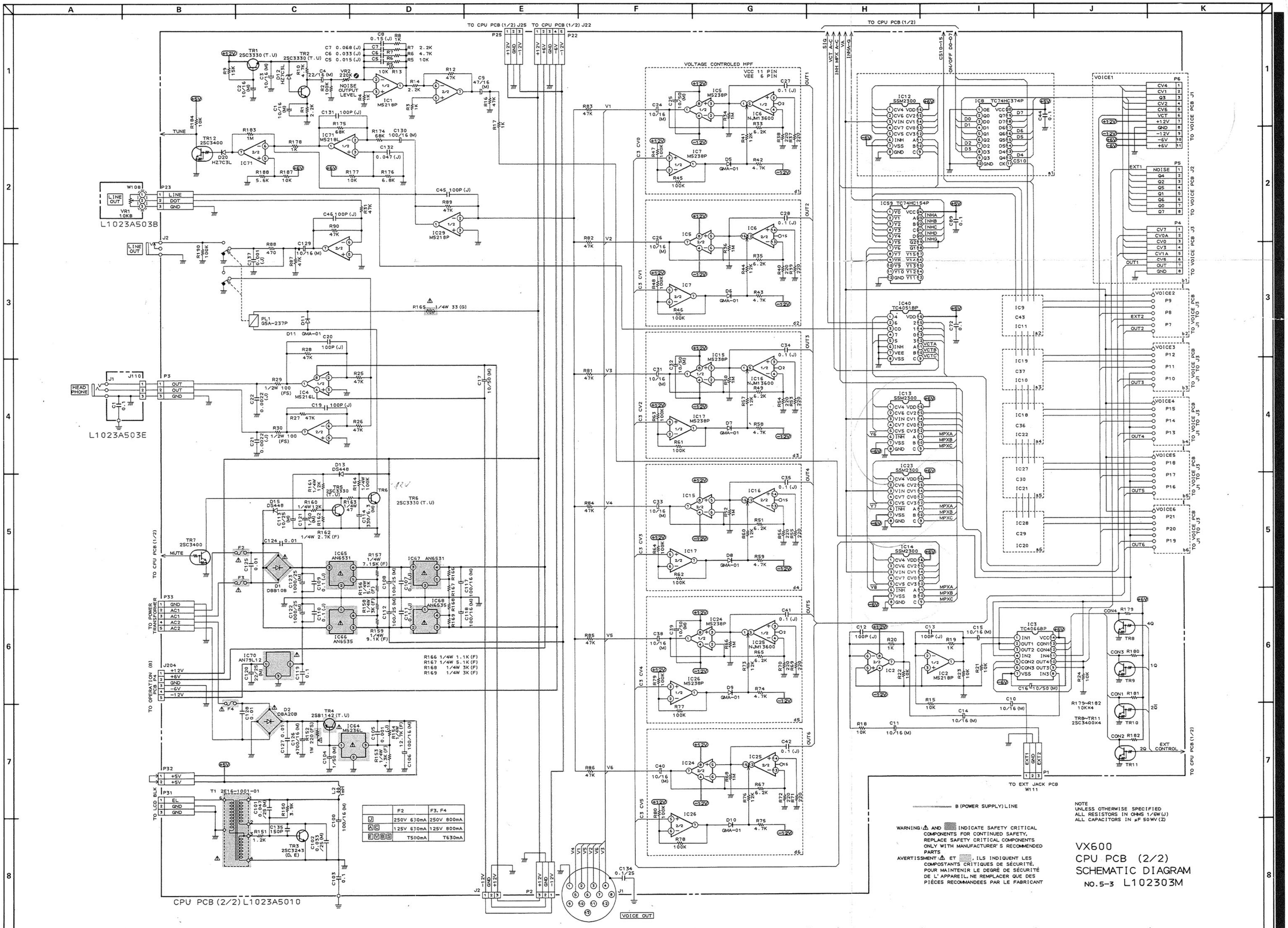

	F2	F3, F4
U	250V 630mA	250V 800mA
A C	125V 630mA	125V 800mA
E V B S	T500mA	T630mA

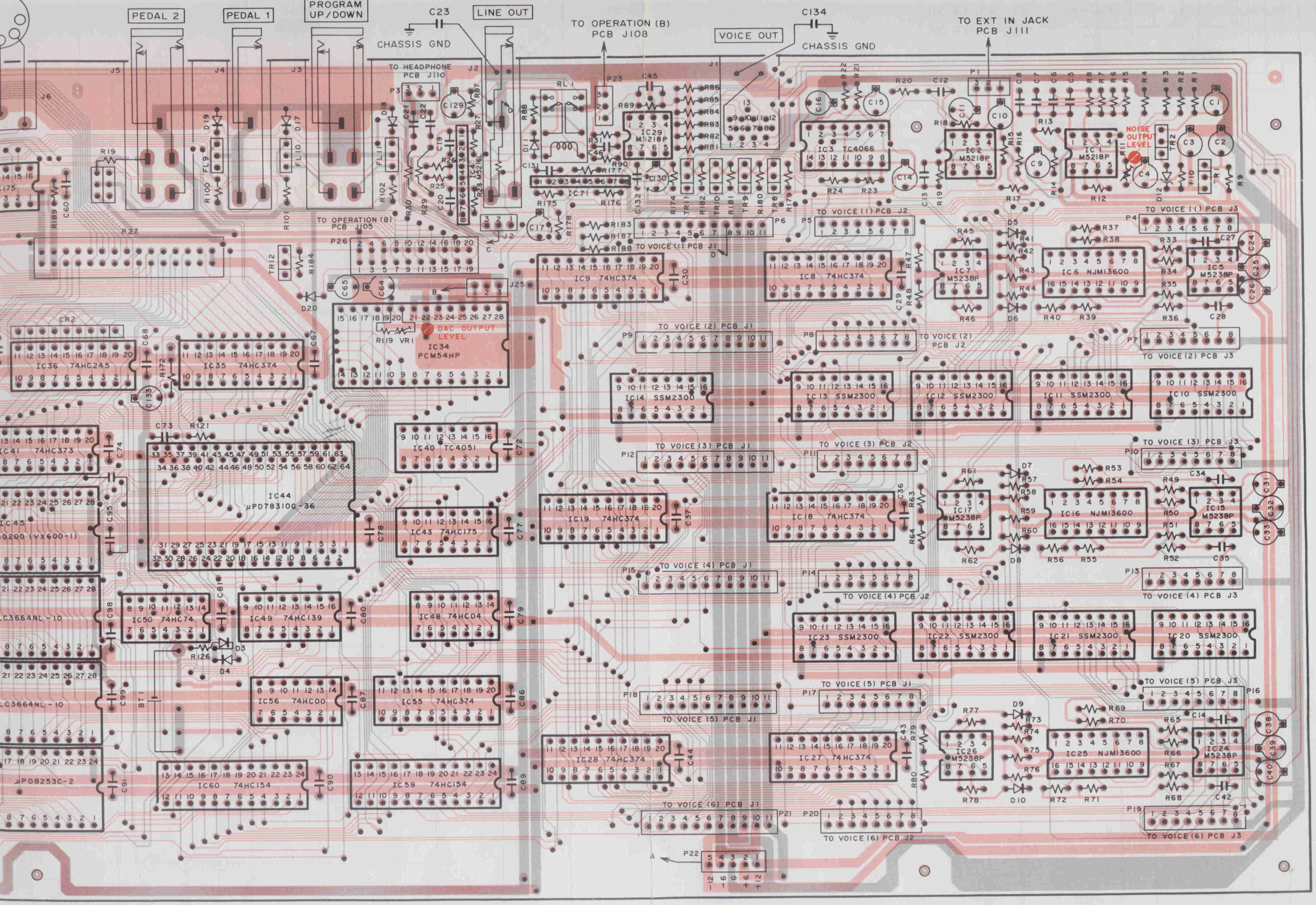

CPU PCB L1023A5010

ANSISTOR CONNECTOR

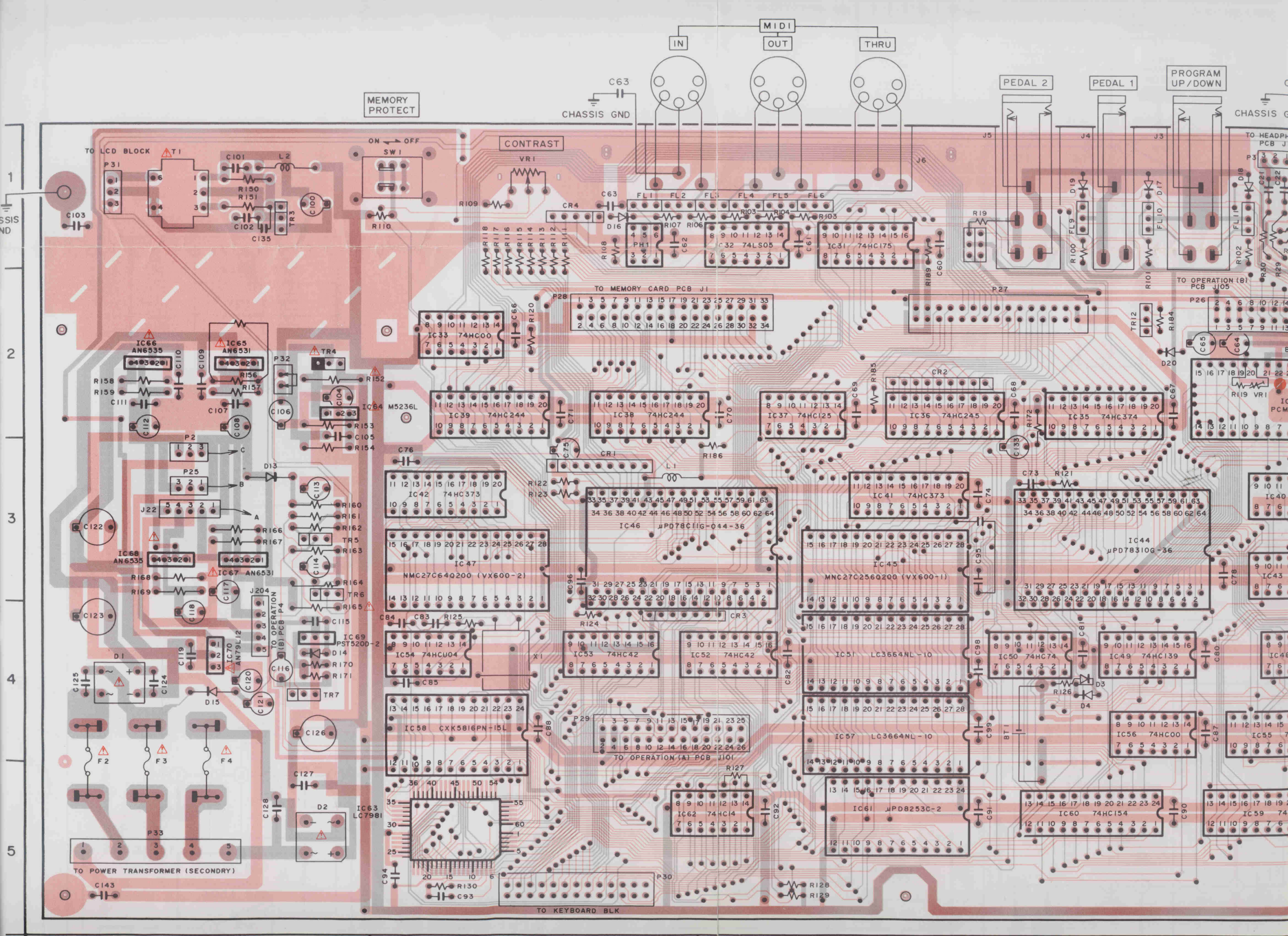
MIDI
IN
OUT
THRU
C63
CHASSIS GND
MEMORY PROTECT
ON OFF
SW1
CONTRAST
VR1
PEDAL 2
PEDAL 1
PROGRAM UP/DOWN
TO LCD BLOCK
P31
T1
C101
L2
R150
R151
C102
C135
TR3
C100
C103
R110
R109
CR4
FL1
FL2
FL3
FL4
FL5
FL6
R107
R106
R103
R104
R108
PH1
IC32 74LS05
IC31 74HC175
R189
C60
R19
J5
J4
J3
J6
D19
D17
D18
FL9
FL10
FL11
R100
R101
R102
R30
R29
TO HEADPHONE PCB J
P3
C21
C22
TO MEMORY CARD PCB J1
P28
P27
TO OPERATION (B) PCB J105
P26
TR12
R184
D20
C65
C64
IC66 AN6535
IC65 AN6531
R158
R159
C111
C110
C109
R156
R157
C107
C108
C112
P32
TR4
R152
C104
IC64 M5236L
R153
C105
R154
C106
IC33 74HC00
C66
R120
IC39 74HC244
IC38 74HC244
IC37 74HC125
IC36 74HC245
IC35 74HC374
C71
C70
C69
R185
CR2
C68
C67
R172
C133
R119
VR1
R186
C75
CR1
L1
P2
C
P25
B
D13
J22
A
C122
R160
R161
R162
TR5
R163
R166
R167
IC68 AN6535
IC67 AN6531
R168
R169
C114
C117
J204
R164
TR6
R165
C118
C123
C115
IC69 PST520D-2
D14
R170
R171
TO OPERATION (B) PCB P4
IC70 AN79L12
C119
C116
C120
C121
D1
C125
C124
D15
TR7
C126
F2
F3
F4
C127
C128
D2
IC63 LC7981
P33
TO POWER TRANSFORMER (SECONDRY)
C143
C76
IC42 74HC373
IC46 μPD78C11G-044-36
IC41 74HC373
IC40
C73
R121
C74
IC47 NMC27C640Q200 (VX600-2)
IC45 NMC27C256Q200 (VX600-1)
IC44 μPD78310G-36
IC43
C96
C95
C78
C84
C83
R125
R124
CR3
IC54 74HCU04
IC53 74HC42
IC52 74HC42
IC51 LC3664NL-10
IC50 74HC74
IC49 74HC139
C98
C81
C80
C82
X1
C85
R126
D3
D4
IC58 CXK5816PN-15L
C88
P29
TO OPERATION (A) PCB J101
IC57 LC3664NL-10
C99
BT1
IC56 74HC00
C87
R127
IC62 74HC14
C92
IC61 μPD8253C-2
C91
IC60 74HC154
C90
IC59
C94
R130
C93
P30
TO KEYBOARD BLK
R128
R129

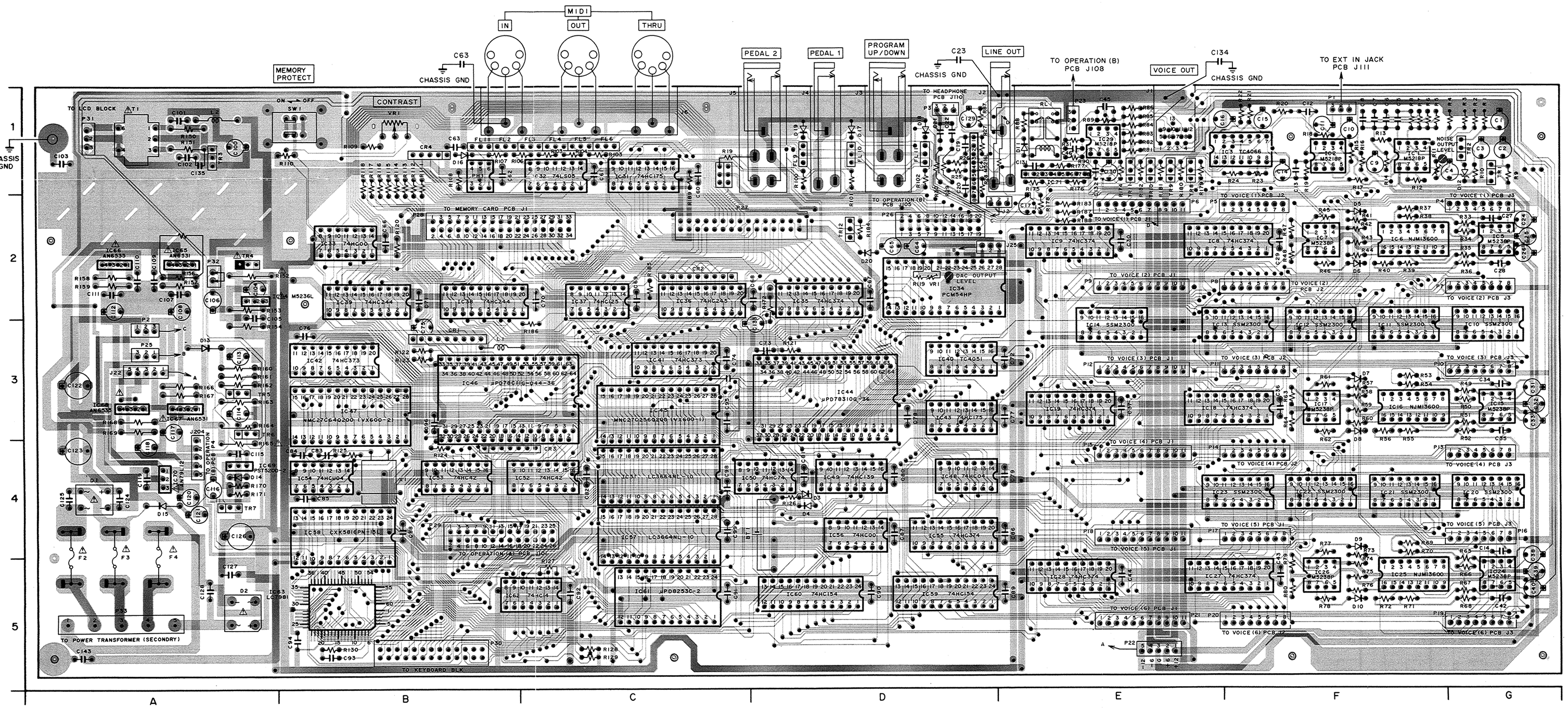

CPU PCB L1023A5010

LOCATION OF COMPONENT

IC

IC 1 ····· F1	IC 17 ····· F3	IC34 ····· D2	IC50 ····· C,D4
IC 2 ····· F1	IC 18 ····· E,F3	IC35 ····· D2	IC51 ····· C4
IC 3 ····· E,F1	IC 19 ····· E3	IC36 ····· C2	IC52 ····· B,C4
IC 4 ····· D,E2	IC20 ····· G4	IC37 ····· C2	IC53 ····· B4
IC 5 ····· G2	IC21 ····· F4	IC38 ····· B2	IC54 ····· B4
IC 6 ····· F2	IC22 ····· F4	IC39 ····· B2	IC55 ····· D4
IC 7 ····· F2	IC23 ····· E,F4	IC40 ····· D3	IC56 ····· D4
IC 8 ····· E,F2	IC24 ····· G5	IC41 ····· C3	IC57 ····· C4
IC 9 ····· E2	IC25 ····· F5	IC42 ····· B3	IC58 ····· B4
IC10 ····· G3	IC26 ····· F5	IC43 ····· D3	IC59 ····· D5
IC11 ····· F3	IC27 ····· E,F5	IC44 ····· D3	IC60 ····· D5
IC12 ····· F3	IC28 ····· E5	IC45 ····· C3	IC61 ····· C5
IC13 ····· E,F3	IC29 ····· E1	IC46 ····· B,C3	IC62 ····· B,C5
IC14 ····· E3	IC31 ····· C1	IC47 ····· B3	IC63 ····· B5
IC15 ····· G3	IC32 ····· C1	IC48 ····· D4	IC64 ····· A2
IC16 ····· F3	IC33 ····· B2	IC49 ····· D4	IC65 ····· A2

IC66 ····· A2	
IC67 ····· A3	
IC68 ····· A3	
IC69 ····· A4	
IC70 ····· A4	
IC71 ····· E1	

TRANSISTOR

TR 1 ····· G1	
TR 2 ····· G1	
TR 3 ····· A1	
TR 4 ····· A2	
TR 5 ····· A3	
TR 6 ····· A3	
TR 7 ····· A4	
TR 8 ····· E1	
TR 9 ····· E1	
TR10 ····· E1	
TR11 ····· E1	
TR12 ····· D2	

CONNECTOR

P 1 ····· F1	P17 ····· E,F4	J2 ····· D,E2
P 2 ····· A3	P18 ····· E4	J22 ····· A3
P 3 ····· D1	P19 ····· F,G5	J25 ····· D,E2
P 4 ····· F,G2	P20 ····· E,F5	J204 ····· A4
P 5 ····· E,F2	P21 ····· E5	
P 6 ····· E2	P22 ····· E5	
P 7 ····· F,G2	P23 ····· E1	
P 8 ····· E,F2	P25 ····· A3	
P 9 ····· E2	P26 ····· D2	
P10 ····· G3	P27 ····· C,D2	
P11 ····· E,F3	P28 ····· B,C2	
P12 ····· E3	P29 ····· B,C4	
P13 ····· F,G4	P30 ····· B5	
P14 ····· E,F4	P31 ····· A1	
P15 ····· E4	P32 ····· A2	
P16 ····· F,G4	P33 ····· A5	

B
PNP TRANSISTOR

B
NPN TRANSISTOR

WARNING: ⚠ INDICATES SAFETY CRITICAL COMPONENTS FOR CONTINUED SAFETY. REPLACE SAFETY CRITICAL COMPONENTS ONLY WITH MANUFACTURER'S RECOMMENDED PARTS

AVERTISSEMENT: ⚠ IL INDIQUE LES COMPOSANTS CRITIQUES DE SÉCURITÉ. POUR MAINTENIR LE DEGRÉ DE SÉCURITÉ DE L'APPAREIL, NE REMPLACER QUE DES PIÈCES RECOMMANDEES PAR LE FABRICANT

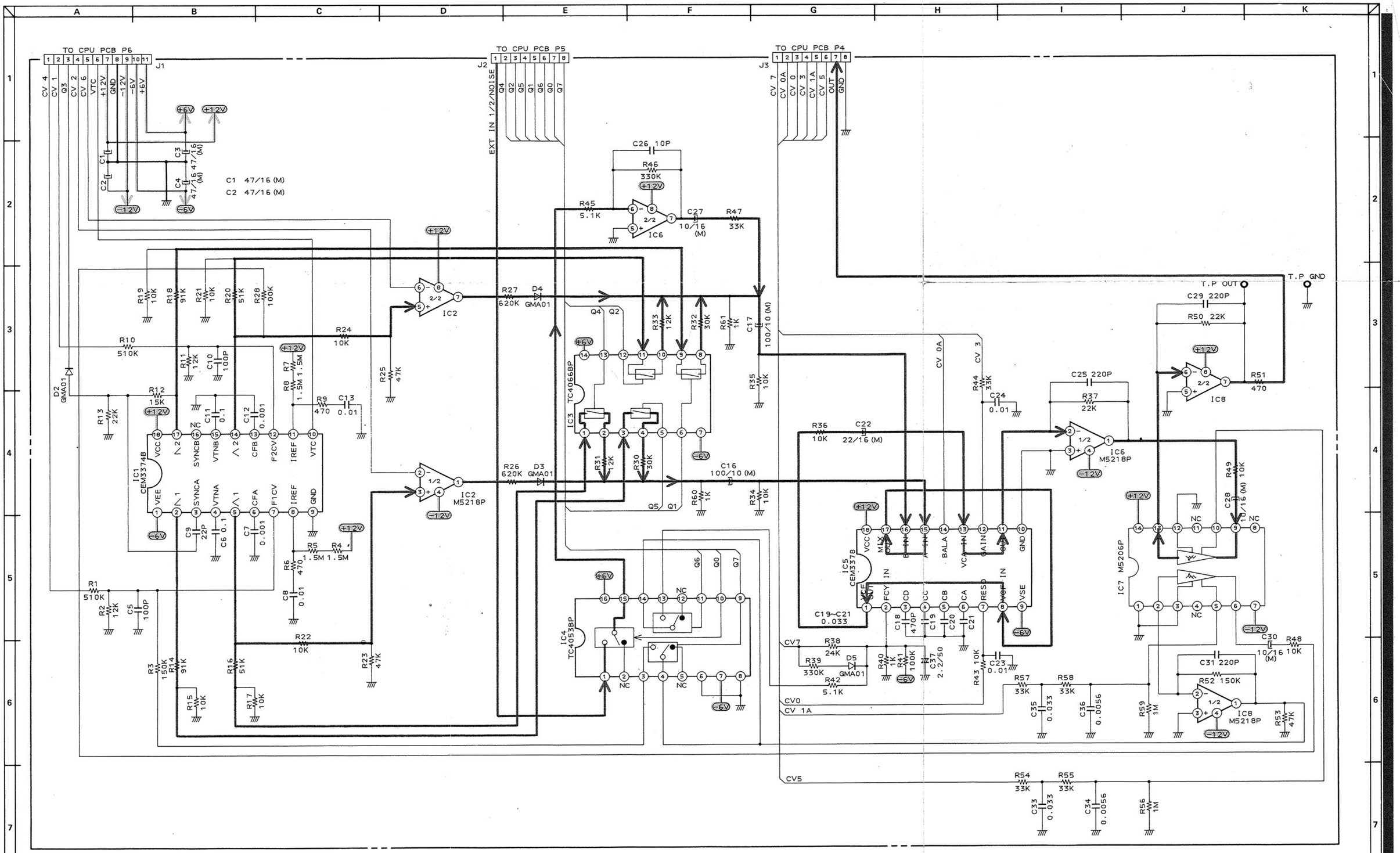
TO CPU PCB P6
TO CPU PCB P5
TO CPU PCB P4
EXT IN 1/2/NOISE
C1 47/16 (M)
C2 47/16 (M)
IC1 CEM3374B
IC2 M5218P
IC3 TC4066BP
IC4 TC4053BP
IC5 CEM3378
IC6 M5218P
IC7 M5206P
IC8 M5218P
T.P OUT
T.P GND
C19~C21 0.033
VOICE PCB L1023A5020
B (POWER SUPPLY) LINE
SIGNAL LINE
NOTE
UNLESS OTHERWISE SPECIFIED
ALL RESISTORS IN OHMS 1/6W(J)
ALL CAPACITORS IN μF 50 WV(Z)
VX600
VOICE PCB
SCHEMATIC DIAGRAM
NO.5-4 L102305M

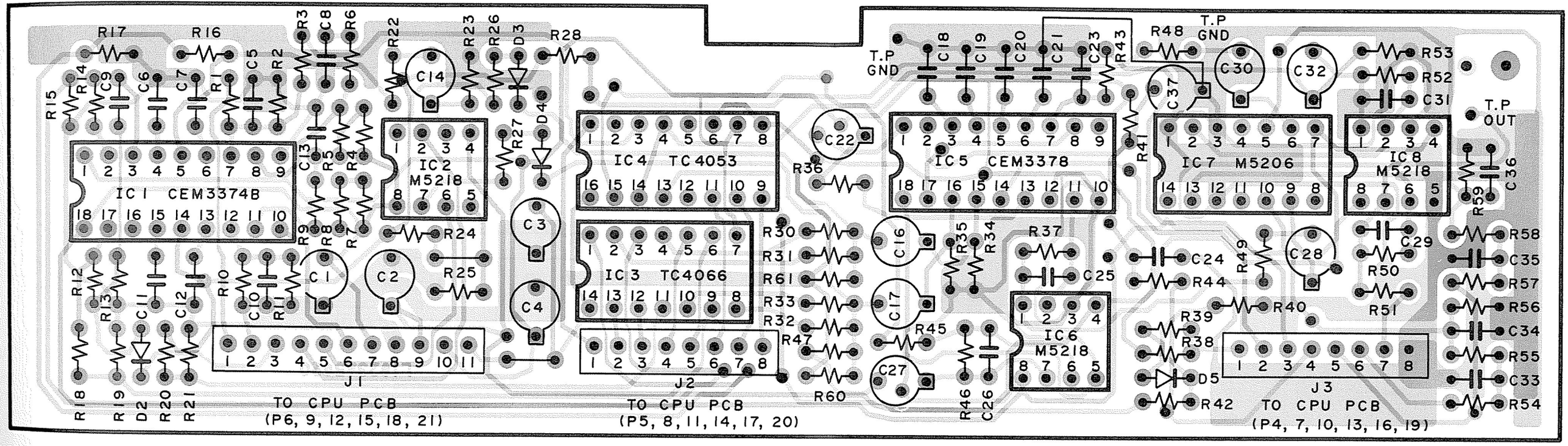

VOICE PCB L1023A5020

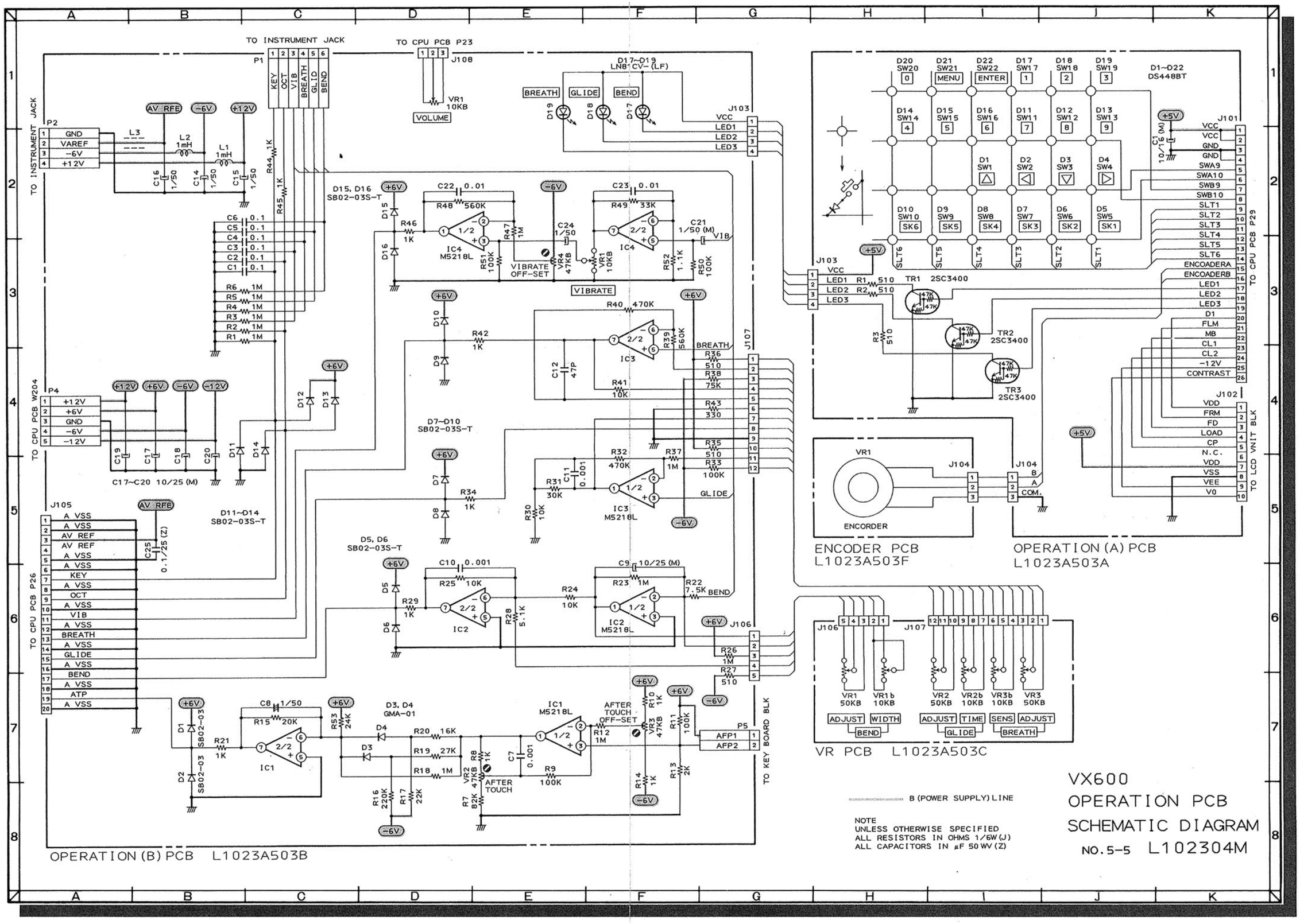
TO INSTRUMENT JACK
TO CPU PCB P23
TO INSTRUMENT JACK
TO CPU PCB W204
TO CPU PCB P26
TO CPU PCB P29
TO LCD UNIT BLK
TO KEY BOARD BLK
VOLUME
VIBRATE OFF-SET
VIBRATE
AFTER TOUCH OFF-SET
AFTER TOUCH
ENCORDER
ENCODER PCB
L1023A503F
OPERATION (A) PCB
L1023A503A
VR PCB L1023A503C
OPERATION (B) PCB L1023A503B
B (POWER SUPPLY) LINE
NOTE
UNLESS OTHERWISE SPECIFIED
ALL RESISTORS IN OHMS 1/6W(J)
ALL CAPACITORS IN μF 50WV(Z)
VX600
OPERATION PCB
SCHEMATIC DIAGRAM
NO.5-5 L102304M

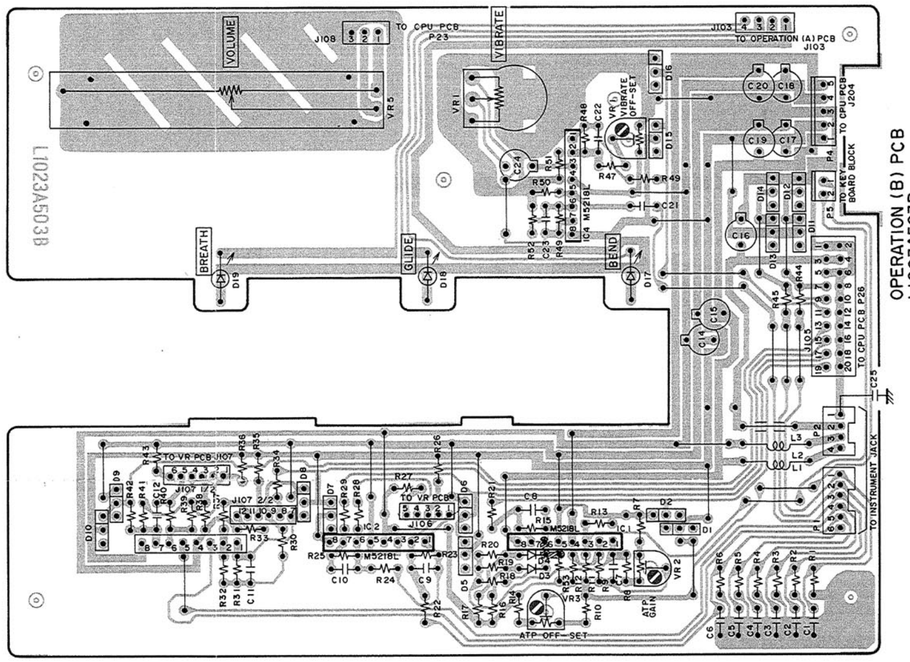

OPERATION (B) PCB
L1023A503B

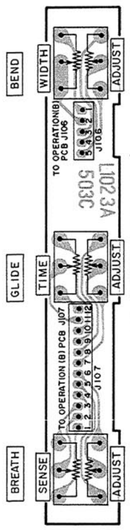

VR PCB L1023A503C

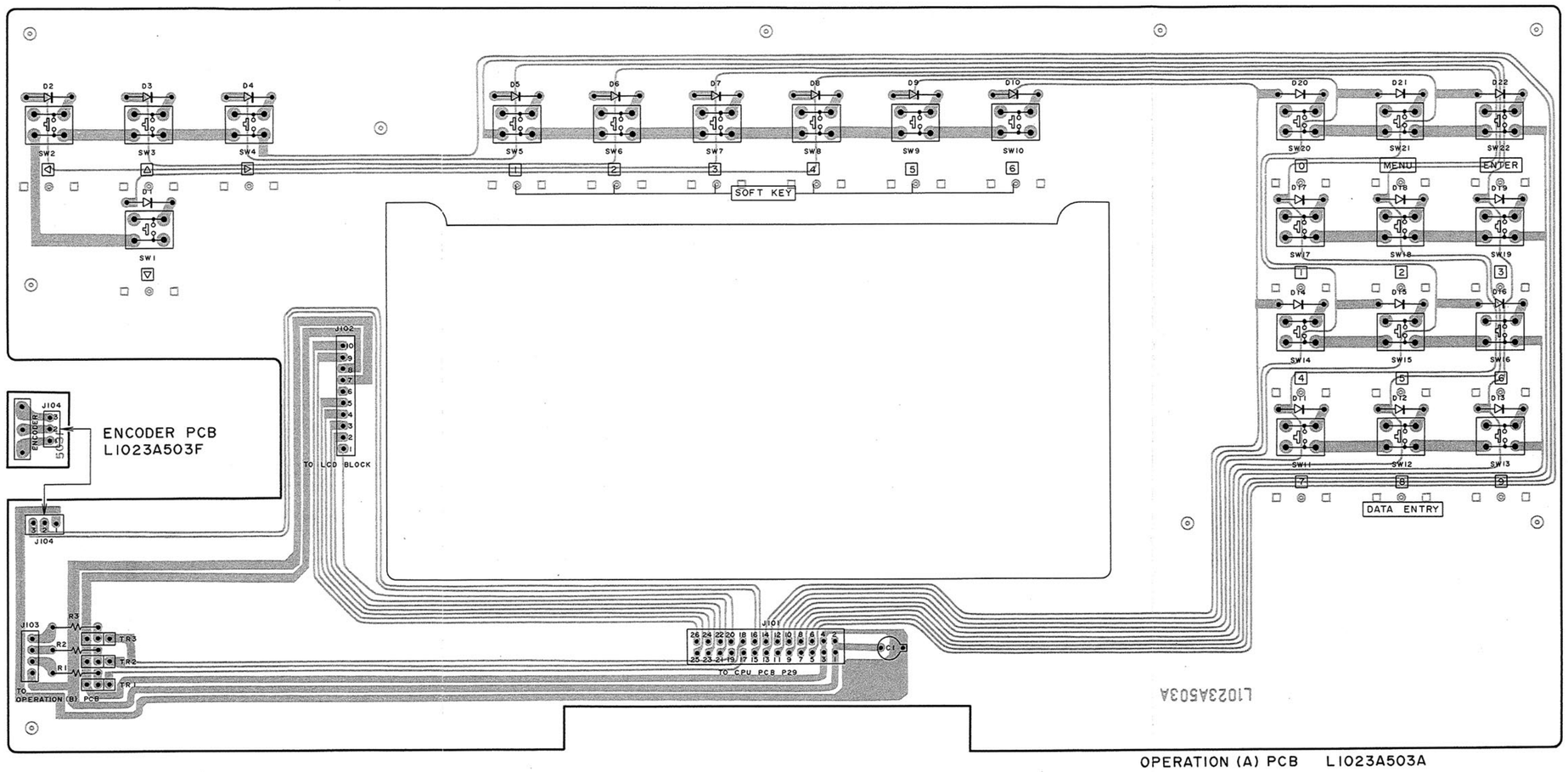

OPERATION (A) PCB L1023A503A

NPN TRANSISTOR

2SC3400

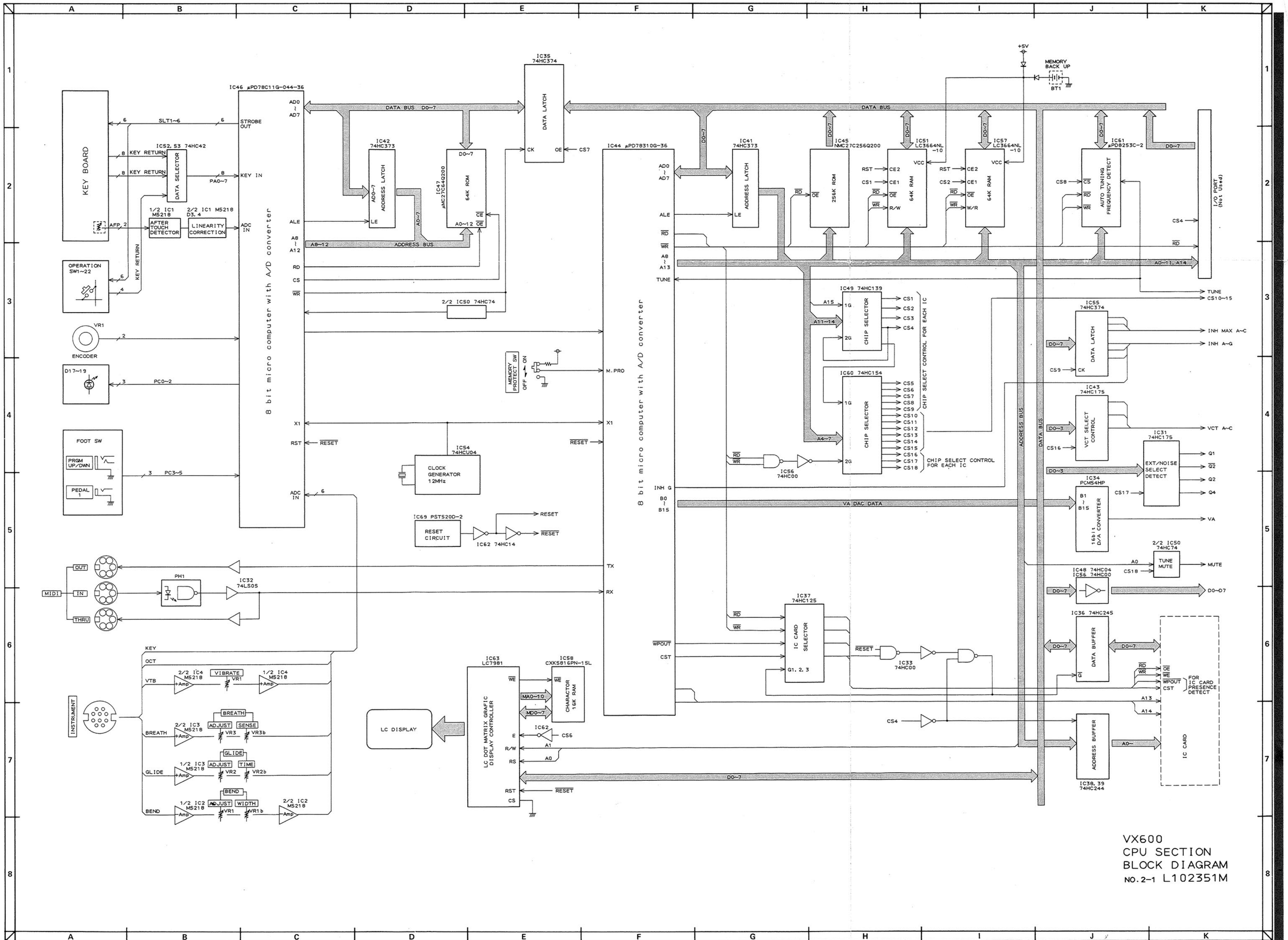
VX600
CPU SECTION
BLOCK DIAGRAM
NO.2-1 L102351M
IC46 μPD78C11G-044-36
8 bit micro computer with A/D converter
KEY BOARD
SLT1~6
STROBE OUT
KEY RETURN
IC52, 53 74HC42
DATA SELECTOR
PA0~7
KEY IN
AFP
1/2 IC1 M5218
AFTER TOUCH DETECTOR
2/2 IC1 M5218
D3, 4
LINEARITY CORRECTION
ADC IN
OPERATION SW1~22
VR1
ENCODER
D17~19
PC0~2
FOOT SW
PRGM UP/DWN
PEDAL 1
PC3~5
IC35 74HC374
DATA LATCH
DATA BUS D0~7
IC42 74HC373
ADDRESS LATCH
IC47 μPC27C4Q200
64K ROM
A8~12
ADDRESS BUS
2/2 IC50 74HC74
MEMORY PROTECT SW
OFF ON
M.PRO
IC54 74HCU04
CLOCK GENERATOR 12MHz
IC69 PST520D-2
RESET CIRCUIT
IC62 74HC14
RESET
IC44 μPD78310G-36
8 bit micro computer with A/D converter
TX
RX
IC41 74HC373
ADDRESS LATCH
IC45 NMC27C256Q200
256K ROM
IC51 LC3664NL-10
64K RAM
IC57 LC3664NL-10
64K RAM
IC61 μPD8253C-2
AUTO TUNING FREQUENCY DETECT
I/O PORT (Not Used)
MEMORY BACK UP
BT1
+5V
A0~11, A14
TUNE
CS10~15
IC49 74HC139
CHIP SELECTOR
IC60 74HC154
CHIP SELECTOR
CHIP SELECT CONTROL FOR EACH IC
IC56 74HC00
IC55 74HC374
DATA LATCH
INH MAX A~C
INH A~G
IC43 74HC175
VCT SELECT CONTROL
VCT A~C
IC31 74HC175
EXT/NOISE SELECT DETECT
IC34 PCM54HP
16bit D/A CONVERTER
VA DAC DATA
VA
2/2 IC50 74HC74
TUNE MUTE
MUTE
IC48 74HC04
IC56 74HC00
D0~D7
IC36 74HC245
DATA BUFFER
IC38, 39 74HC244
ADDRESS BUFFER
IC37 74HC125
IC CARD SELECTOR
IC33 74HC00
FOR IC CARD PRESENCE DETECT
IC CARD
MIDI
OUT
IN
THRU
PH1
IC32 74LS05
INSTRUMENT
KEY
OCT
VTB
2/2 IC4 M5218
VIBRATE
VR1
1/2 IC4 M5218
BREATH
ADJUST
SENSE
VR3
VR3b
GLIDE
TIME
VR2
VR2b
BEND
WIDTH
VR1
VR1b
2/2 IC2 M5218
IC63 LC7981
LC DOT MATRIX GRAFIC DISPLAY CONTROLLER
IC59 CXK5816PN-15L
CHARACTOR 16K RAM
LC DISPLAY
MA0~10
MD0~7
DATA BUS
ADDRESS BUS

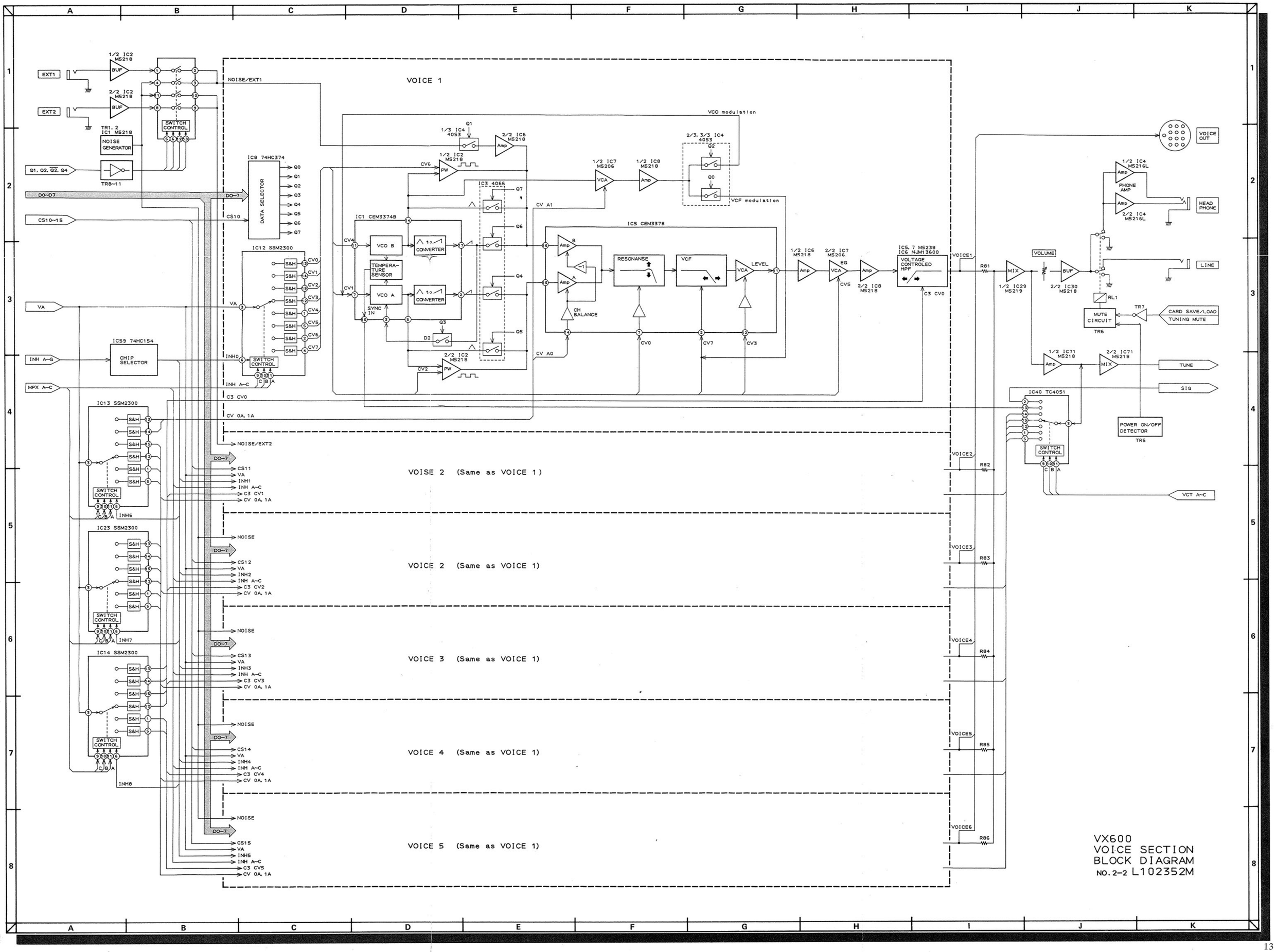

VX600
VOICE SECTION
BLOCK DIAGRAM
NO. 2-2 L102352M

INFORMATION OF IC'S

74HC42

FUNCTION TABLE

NO.	INPUTS D	C	B	A	OUTPUTS 0	1	2	3	4	5	6	7	8	9
0	L	L	L	L	L	H	H	H	H	H	H	H	H	H
1	L	L	L	H	H	L	H	H	H	H	H	H	H	H
2	L	L	H	L	H	H	L	H	H	H	H	H	H	H
3	L	L	H	H	H	H	H	L	H	H	H	H	H	H
4	L	H	L	L	H	H	H	H	L	H	H	H	H	H
5	L	H	L	H	H	H	H	H	H	L	H	H	H	H
6	L	H	H	L	H	H	H	H	H	H	L	H	H	H
7	L	H	H	H	H	H	H	H	H	H	H	L	H	H
8	H	L	L	L	H	H	H	H	H	H	H	H	L	H
9	H	L	L	H	H	H	H	H	H	H	H	H	H	L
INVALID	H	L	H	L	H	H	H	H	H	H	H	H	H	H
	H	L	H	H	H	H	H	H	H	H	H	H	H	H
	H	H	L	L	H	H	H	H	H	H	H	H	H	H
	H	H	L	H	H	H	H	H	H	H	H	H	H	H
	H	H	H	L	H	H	H	H	H	H	H	H	H	H
	H	H	H	H	H	H	H	H	H	H	H	H	H	H

74HC139

INPUTS ENABLE G	SELECT B	A	OUTPUTS Y0	Y1	Y2	Y3
H	X	X	H	H	H	H
L	L	L	L	H	H	H
L	L	H	H	L	H	H
L	H	L	H	H	L	H
L	H	H	H	H	H	L

74HC154

INPUTS G1	G2	D	C	B	A	OUTPUTS 0	1	2	3	4	5	6	7	8	9	10	11	12	13	14	15
L	L	L	L	L	L	L	H	H	H	H	H	H	H	H	H	H	H	H	H	H	H
L	L	L	L	L	H	H	L	H	H	H	H	H	H	H	H	H	H	H	H	H	H
L	L	L	L	H	L	H	H	L	H	H	H	H	H	H	H	H	H	H	H	H	H
L	L	L	L	H	H	H	H	H	L	H	H	H	H	H	H	H	H	H	H	H	H
L	L	L	H	L	L	H	H	H	H	L	H	H	H	H	H	H	H	H	H	H	H
L	L	L	H	L	H	H	H	H	H	H	L	H	H	H	H	H	H	H	H	H	H
L	L	L	H	H	L	H	H	H	H	H	H	L	H	H	H	H	H	H	H	H	H
L	L	L	H	H	H	H	H	H	H	H	H	H	L	H	H	H	H	H	H	H	H
L	L	H	L	L	L	H	H	H	H	H	H	H	H	L	H	H	H	H	H	H	H
L	L	H	L	L	H	H	H	H	H	H	H	H	H	H	L	H	H	H	H	H	H
L	L	H	L	H	L	H	H	H	H	H	H	H	H	H	H	L	H	H	H	H	H
L	L	H	L	H	H	H	H	H	H	H	H	H	H	H	H	H	L	H	H	H	H
L	L	H	H	L	L	H	H	H	H	H	H	H	H	H	H	H	H	L	H	H	H
L	L	H	H	L	H	H	H	H	H	H	H	H	H	H	H	H	H	H	L	H	H
L	L	H	H	H	L	H	H	H	H	H	H	H	H	H	H	H	H	H	H	L	H
L	L	H	H	H	H	H	H	H	H	H	H	H	H	H	H	H	H	H	H	H	L
L	H	X	X	X	X	H	H	H	H	H	H	H	H	H	H	H	H	H	H	H	H
H	L	X	X	X	X	H	H	H	H	H	H	H	H	H	H	H	H	H	H	H	H
H	H	X	X	X	X	H	H	H	H	H	H	H	H	H	H	H	H	H	H	H	H

74HC374

INPUT Output control	CK	FUNCTION
X	↑	Data . Set
H	X	Output Hi-impedance

PST520D

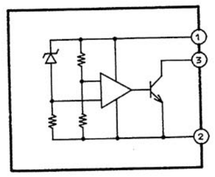

AN6531

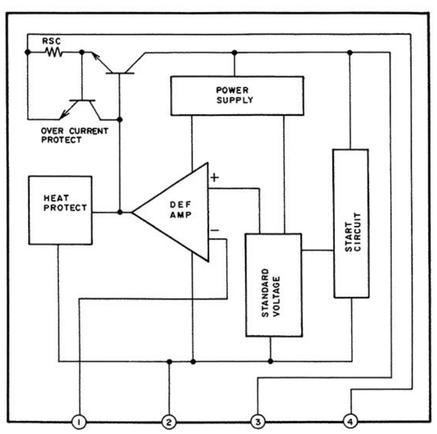

CEM3374

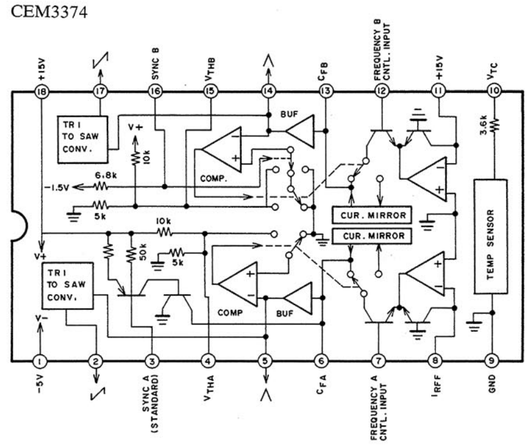

CEM3378

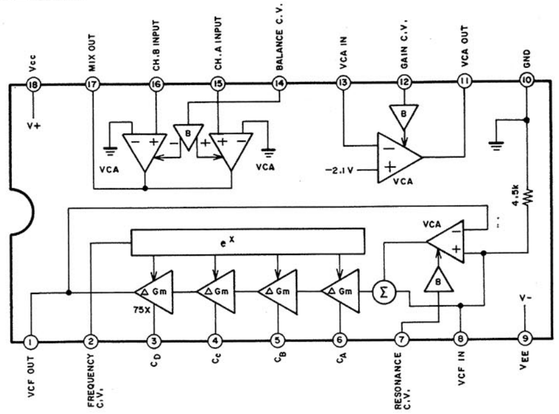

PCM54HP

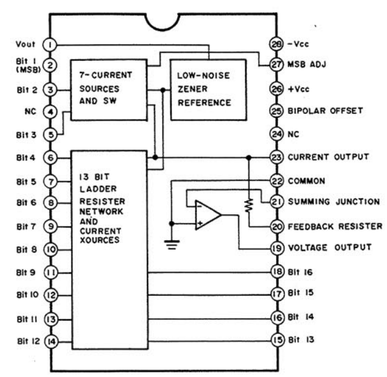

PIN NO.	FUNCTION	PIN NO.	FINCTION
1	Vout	15	Bit 13
2	Bit 1(MSB)	16	Bit 14
3	Bit 2	17	Bit 15
4	NC	18	Bit 16
5	Bit 3	19	VOLTAGE OUTPUT
6	Bit 4	20	FEEDBACK RESISTER
7	Bit 5	21	SUMMING JUNCTION
8	Bit 6	22	COMMON
9	Bit 7	23	CURRENT OUTPUT
10	Bit 8	24	NC
11	Bit 9	25	BIPOLAR OFFSET
12	Bit 10	26	+Vcc
13	Bit 11	27	MSB ADJ
14	Bit 12	28	−Vcc

AN6535

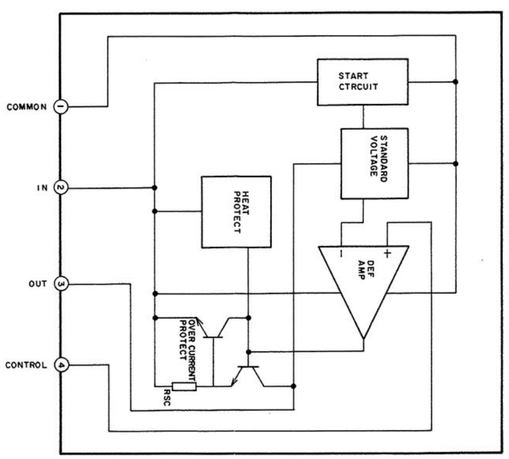

SSM2300

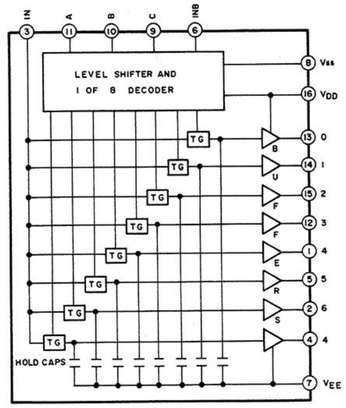

TC4051

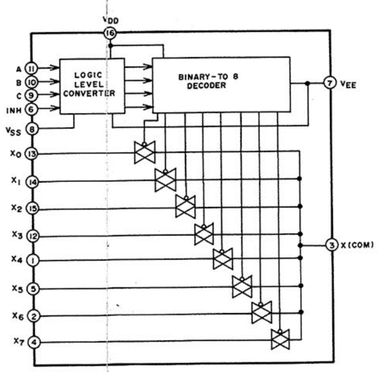

TC4053

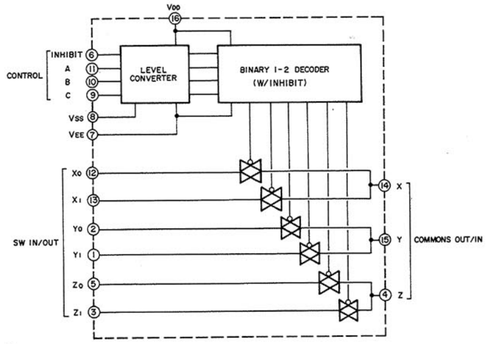

(MC14051BP, MC14053BP TRUTH TABLE)

TRUTH TABLE

CONTROL INPUT INHIBIT	C	B	A	"ON" CHANNEL MC14051BP	MC14053BP
L	L	L	L	X0	Z0, Y0, X0
L	L	L	H	X1	Z0, Y0, X1
L	L	H	L	X2	Z0, Y1, X0
L	L	H	H	X3	Z0, Y1, X1
L	H	L	L	X4	Z1, Y0, X0
L	H	L	H	X5	Z1, Y0, X1
L	H	H	L	X6	Z1, Y1, X0
L	H	H	H	X7	Z1, Y1, X1
H	X	X	X	NONE	NONE

X : H OR L

TC4066BP

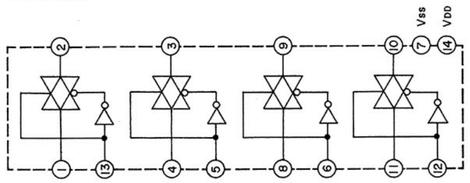

FUNCTION OF IC's

NAME OF IC	FUNCTION
74HC00	Quad 2 input NAND
74HC04/HCU04	Hex inverters
74LS05	Hex inverter(open corrector type)
74HC14	Hex shmitt trigger inverter
74HC42	BCD to DECIMAL decoder
74HC74	Dual D-FFs with reset and clear
74HC125	Quad 3 state bus buffer
74HC139	Dual 2 to 4 demultiplexer
74HC154	4 to 16 demultiplexer
74HC175	Quad D-FFs
74HC244	Octal 3 state bus buffer
74HC245	Octal 3 state bus tranceiver
74HC373	Octal 3 state D-latches
74HC374	Octal 3 state D-FFs
AN79L12	−12V voltage regulator
AN6531	Variable output, + voltage regulator
AN6535	Variable output, − voltage regulator
CEM3374	Dual voltage controlled oscillator
CEM3378	Voltage controlled signal processor
CXK5816PN-15L	2kx8 bit SRAM
LC3664NL-10	8kx8 bit RAM
LC7981	LC dot matrix graphic display controller
M5206	Voltage controlled amplifier
M5216	Dual large current OP-Amp
M5218	Dual low noise OP-Amp
M5236	Variable output, voltage regulator
M5238	Dual low noise J-FET input OP-Amp
NMC27C64Q200	8kx8 bit EPROM
NMC27C256Q200	32kx8 bit EPROM
NJM13600	
PCM54HP	16 bit D/A convertor
PST520D-2	Reset circuit
SSM2300	8 channel multiplexed sample and hold
TC4051	Single 8 channel multiplexer/demultiplexer
TC4053	Triple 2 channel multiplexer/demultiplexer
TC4066	Quad bilateral switch
µPD78C11G-044-36	8 bit micro computer with A/D convertor
µPD8523C	
µPD78310G-36	